EASY FINISHING:

Wipe On, Wipe Off — Success Guaranteed!

Woodsmith®

www.woodsmith.com

Vol. 29 / No. 169

Weekend Workshop: Easy-to-Build, Drop-Front STORAGE CENTER

Learn Simple Techniques to Make This Project an Instant Antique, Turn to p. 16

MORE INSIDE:

How to Make **Perfect Crosscuts, *Every Time***

New, Shop-Tested Router Technique for Dovetails

Better Clamps — New Design, Lower Cost

A Publication of August Home Publishing

Table of Contents

from our readers
Tips & Techniques 4

tools of the trade
New Parallel-Jaw Clamps 8
There's always a way to make a good thing even better. Two new clamps have the right idea.

techniques from our shop
Splinter-Free Crosscuts. 10
The table saw and crosscuts go hand in hand. Here's how to get the best possible results.

tips from our shop
Shop Notebook 28

woodworking technique
Half-Blind Dovetails 38
Get the fine craftsmanship of handcut dovetails without all the work. We'll show you how.

working with tools
Driving Screws. 42
Learn a few tips and tricks that will make working with woodscrews a lot easier.

small shop solutions
Sawhorse Upgrades 44
Don't let your sawhorses slack off. Check out a few great ways to make them work harder.

Woodsmith GO ONLINE EXTRAS

finishing room
Success With Wiping Varnish. 46
Try this quick and easy finish and it might become your "go-to" choice for great-looking projects.

in the mailbox
Q & A 48

hardware and supplies
Sources 49

details of craftsmanship
Insetting Brass Corners 50
Perfectly mounted hardware is a sure sign of a true craftsman. Learn the simple secret.

Drop-Front Storage Center page 12

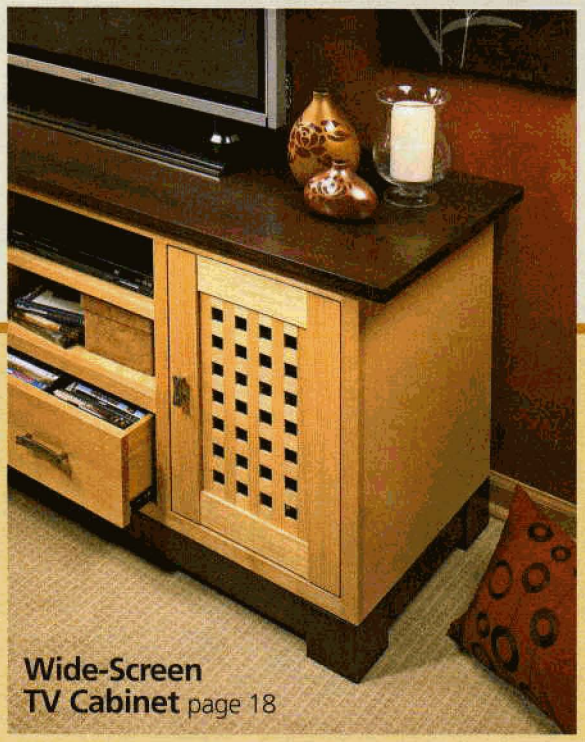

Wide-Screen TV Cabinet page 18

projects

weekend project — DESIGNER'S NOTEBOOK

Drop-Front Storage Center 12

Versatile storage and "country" charm all in an easy-to-build package. Here's a great project that adds up to a well-spent weekend.

designer series project — Woodsmith GO ONLINE EXTRAS — ONLINE EXTRA video workshop

Wide-Screen TV Cabinet 18

This design is as up-to-date as the gear you'll fill it with. Clean lines and straightforward joinery make it a great project to build.

heirloom project

Campaign Chest 30

How about a project that combines traditional joinery and classic details into practical storage? It's guaranteed to take your skills to the next level.

Campaign Chest page 30

editor's note

Sawdust

Home storage is like spare time. No matter how much you have, it never seems like enough. This is exactly what makes the storage center featured on the cover of this issue such a great project. First, it combines three types of storage into one project — it's a wall shelf, a small storage cupboard, and a coat rack all in one. And second, it's simple enough to build in just a weekend.

We've also included two other storage projects in this issue — and they're both quite different. The campaign chest featured on page 30 is a very traditional-looking piece of furniture. Chests like this were originally designed a couple hundred years ago as travelling furniture for military officers. They were carried from post to post, so they had to be built to withstand a lot of handling and abuse. Today, this style of chest makes an ideal project for just about any room in the house. And it's designed so that you can build two and stack one on top of the other — doubling the amount of storage without taking up additional floor space. You'll find a photo of this option on page 31.

For a more contemporary look, try the TV Cabinet on page 18. Unlike a lot of large, towering entertainment centers, this cabinet is low and wide — perfect for a flat-panel, wide-screen TV. Plus, it's got plenty of storage room below for stereo and video components as well as CDs and DVDs. But the feature of this project that really grabs your attention is the lattice panels in the doors. It's a pretty unique detail that helps make this cabinet an interesting project to build *and* to use afterward.

Terry

ONLINE EXTRA video workshop — Woodsmith GO ONLINE EXTRAS

These two symbols let you know there's more information online at www.Woodsmith.com. There you'll see step-by-step videos, technique and project animation, bonus cutting diagrams, and a lot more.

Tips & Techniques

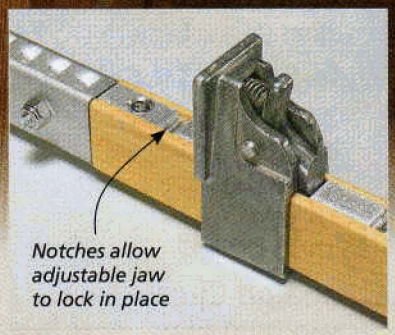

Bar Clamp Extensions

Recently, I was gluing edging around a large table top, and my aluminum bar clamps just weren't long enough to reach across the table. Rather than buying extra-long clamps that I'll only occasionally use, I decided to make extensions for my clamps, like you see above.

What I did was cut a long strip of hardwood (I used hard maple) to match the size and shape of the bar of the clamp. This is important, because the rear clamp jaw has to travel along the extension.

Next, I took the extension to my table saw and cut a groove down its length. This groove holds an aluminum strip that has been notched evenly along its length. These notches allow the adjustable jaw to lock in place (see photo above).

The notches in the aluminum strip can be made easily on your table saw by switching your standard blade to a non-ferrous saw blade.

Next, as the drawings below show, a "tenon" is cut on one end of each extension to fit inside the bar clamp. To hold the extension in place, holes are drilled in the end of the clamp through the tenon for bolts and locknuts.

Now, whenever I need more clamping capacity, it takes just a few seconds to add these extensions to my bar clamps.

Andrew M. Volk
Granite Bay, California

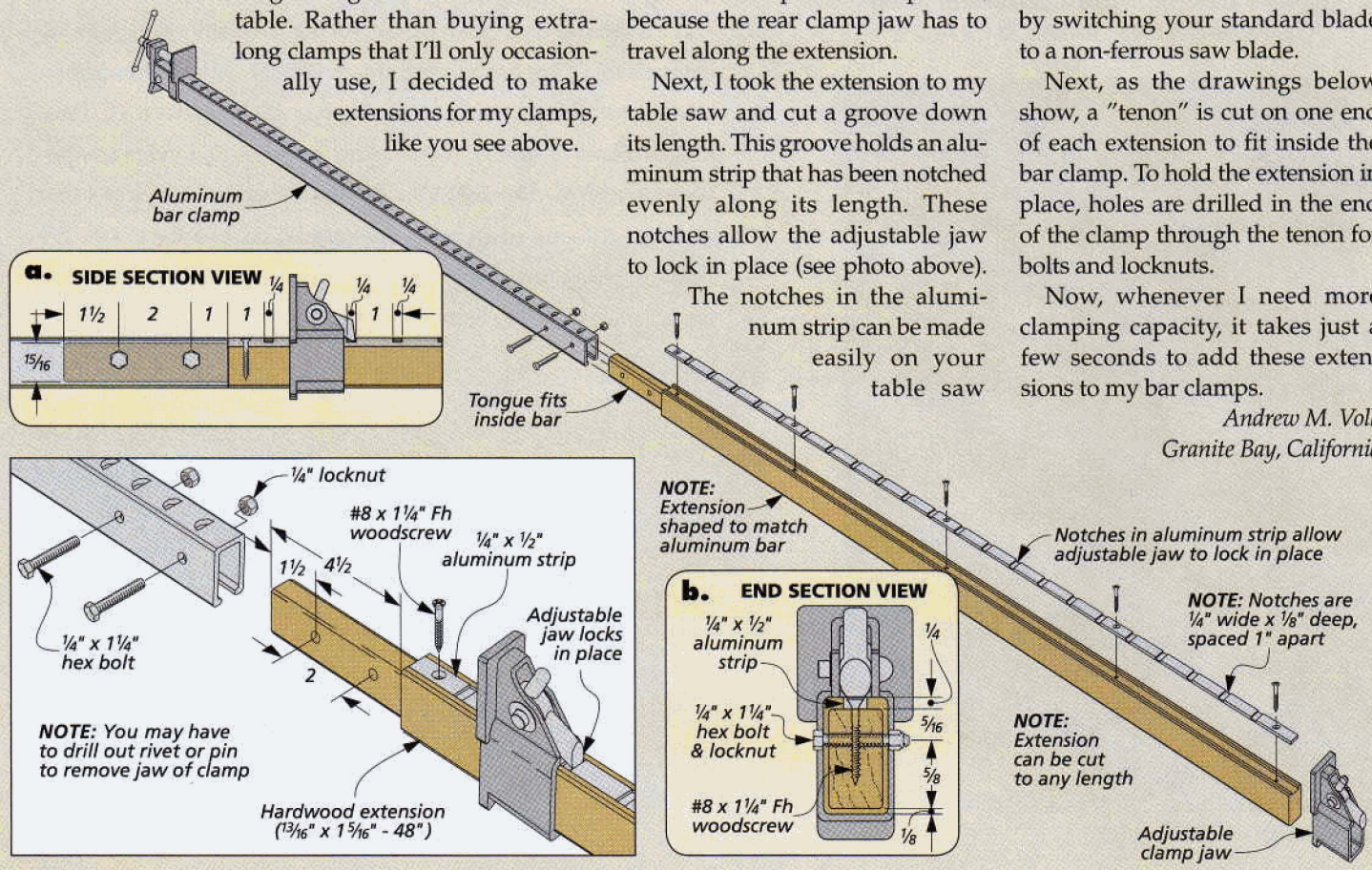

Carabiner Tool Organizer

Rummaging through my tool box or shop drawers to find the right wrench is always a challenge. It inspired me to find a better way to organize my wrenches.

My solution is to use carabiners, like the ones pictured on the right. They come in a wide variety of sizes, and you can get them pretty much anywhere. I found that a small carabiner connected to a larger one will hold a full set of wrenches. Plus, the spring-loaded openers make sure the wrenches stay put, while making it easy to remove the one I need.

And, since they come in many colors, I can use one color for standard wrenches and another for metric ones.

Richard Beatty
Tacoma, Washington

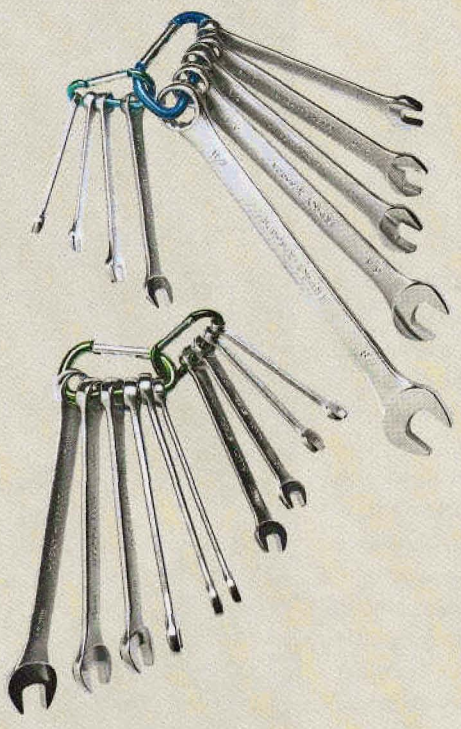

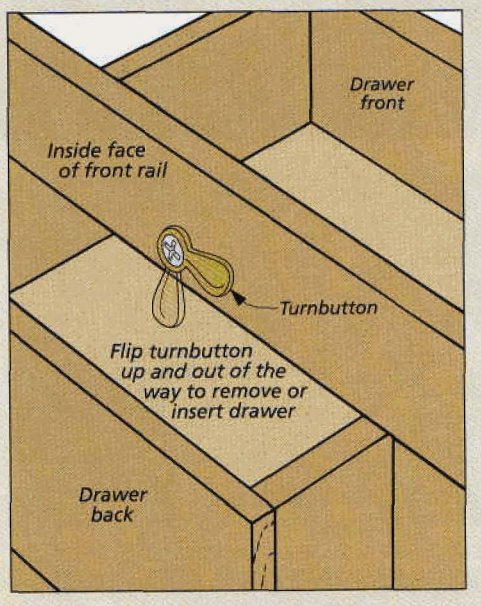

Turnbutton Drawer Catch

Many drawer catches make it difficult to remove the drawer from a cabinet. Or they stop a drawer short so you can't get at the contents that work their way to the back of the drawer. One option is to use brass turnbuttons for drawer catches, like you see in the drawing on the left.

An advantage to using turnbuttons is that they can be installed on the inside of the front rail of the case. That gives you access to the entire drawer.

Plus, they allow drawers to be easily removed. Just open the drawer enough to get your fingers to the turnbutton, push it aside, and the drawer comes right out.

Steve Curtis
Des Moines, Iowa

SUBMIT YOUR TIPS

If you have an original shop tip, we would like to hear from you and consider publishing your tip in one or more of our publications. Just write down your tip and mail it to: *Woodsmith*, Tips and Techniques, 2200 Grand Avenue, Des Moines, Iowa 50312. Please include your name, address, and daytime phone number in case we have any questions. If you would like, FAX it to us at 515-282-6741 or send us an email message at: woodsmith@woodsmith.com. We will pay up to $200 if we publish your tip.

FREE TIPS BY EMAIL

Now, you can have the best, time-saving secrets, solutions, and techniques sent directly to your computer. Just go to **www.woodsmith.com** and click on ***"FREE Tips by Email"*** to sign up. You'll receive a new tip by email each week.

Woodsmith

No. 169 February/March 2007

PUBLISHER Donald B. Peschke

EDITOR Terry J. Strohman

MANAGING EDITOR Vincent Ancona
CONTRIBUTING EDITOR Bryan Nelson
ASSOCIATE EDITORS Phil Huber, Ted Raife
ASSISTANT EDITORS Ron Johnson, Mitch Holmes, Randall A. Maxey, Dennis Perkins

EXECUTIVE ART DIRECTOR Todd Lambirth
SENIOR ILLUSTRATORS David Kreyling, Dirk Ver Steeg, Harlan V. Clark
ILLUSTRATORS David Kallemyn, Peter J. Larson
GRAPHIC DESIGN INTERNS Shelley Cronin, Katie Rodemyer

CREATIVE DIRECTOR Ted Kralicek

SENIOR PROJECT DESIGNERS Ken Munkel, Kent Welsh, Chris Fitch, Jim Downing
PROJECT DESIGNERS/BUILDERS Mike Donovan, John Doyle
SHOP CRAFTSMEN Steve Curtis, Steve Johnson
SR. PHOTOGRAPHERS Crayola England, Dennis Kennedy
ASSOCIATE STYLE DIRECTOR Rebecca Cunningham
ELECTRONIC IMAGE SPECIALIST Allan Ruhnke
VIDEOGRAPHERS Craig Ruegsegger, Mark Hayes

Woodsmith® (ISSN 0164-4114) is published bimonthly (Feb., Apr., June, Aug., Oct., Dec.) by August Home Publishing Company, 2200 Grand Ave, Des Moines, IA 50312.

Woodsmith® is a registered trademark of August Home Publishing.
Copyright© 2007 August Home Publishing Company. All rights reserved.

Subscriptions: Single copy: $4.95. One year subscription (6 issues), $24.95. (Canada/International add $10 per year, U.S. funds.)
Canadian Subscriptions: Canada Post Agreement No. 40038201. Send change of address information to PO Box 881, Station Main, Markham, ON L3P 8M6. Canada BN 84597 5473 RT
Periodicals Postage Paid at Des Moines, IA and at additional offices.
Postmaster: Send change of address to *Woodsmith*, Box 37112, Boone, IA 50037-2112.
Subscription Questions? Write to *Woodsmith*, P.O. Box 842, Des Moines, IA 50304 or call 1-800-333-5075, 8:00 am to 5:00 pm, Central Time, weekdays. Or send an email to: orders@woodsmith.com
Email: woodsmith@woodsmith.com
World Wide Web: http://www.Woodsmith.com

www.Woodsmith.com

ONLINE SUBSCRIBER SERVICES

- **ACCESS** your account
- **CHECK** on a subscription payment
- **TELL US** if you've missed an issue
- **CHANGE** your mailing or e-mail address
- **RENEW** your subscription
- **PAY** your bill

Click on "Subscriber Services" in the list on the left side of our home page. Menus and forms will take you through any of the account-maintenance services you need.

HOW TO REACH US:
FOR SUBSCRIPTIONS, ADDRESS CHANGES OR QUESTIONS, WRITE OR CALL:
Customer Service
2200 Grand Ave., Des Moines, IA 50312
800-333-5075 8 a.m. to 5 p.m. CT

OR VISIT OUR WEB SITE:
www.Woodsmith.com

AUGUST HOME PUBLISHING COMPANY

Printed in U.S.A.

Disc Sander Circle Jig

Since becoming a grandfather, I've made a lot of toy cars, trucks, and other vehicles. One of the problems I've had was making the wheels perfectly round. My solution was to build a jig for my disc sander, as shown in the photo on the right.

The easy-to-build jig has two main parts to it — the base and the slider. The base is held steady on the table of the sanding disc by a runner that fits into the miter gauge slot. The base sits about 1/8" away from the sanding disc.

The slider is attached to the base with a carriage bolt and wing knob. There are guides on both sides of the slider to keep it straight in the jig. I also added a handle to the slider to give me better control. The drawing below shows how all the parts of the jig go together.

To use the jig, I start by rough-cutting a wheel on my band saw or scroll saw. Next, I drill a small hole in the center of the wheel. That hole will fit over a pivot pin in the slider to hold the piece steady while I'm sanding it (see drawing below).

Then, I carefully push the slider toward the disc sander until the wheel barely touches the sanding disc. I tighten the slider with the wing knob. With the sander turned on, hold the wheel firmly on the slider while slowly rotating it against the spinning sanding disc. When you're finished, your wheel will be perfectly round.

Myron Hale
Wister, Oklahoma

EXPLODED VIEW

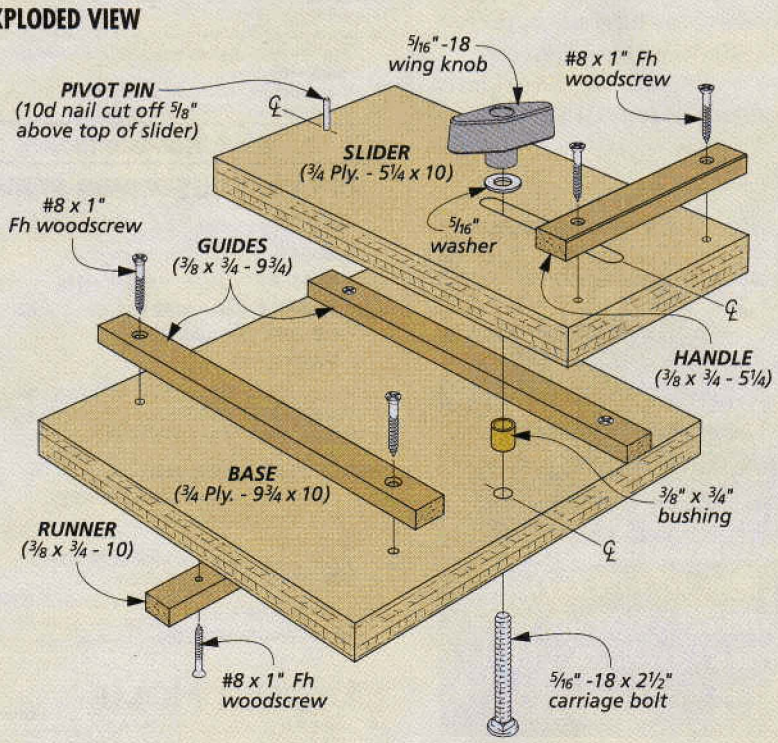

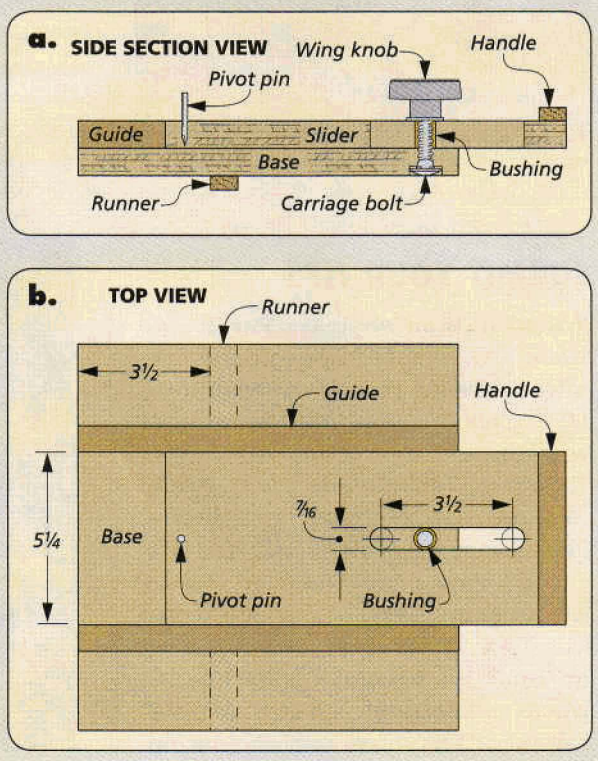

Taper Alignment Gauge

I use a simple, commercial taper jig to cut tapers on my table saw. But setting the angle can be a challenge. To make the task easier, I came up with this alignment gauge (right drawing).

The gauge is nothing more than a cleat and a horizontal hardboard edge guide. The cleat fits snugly in the miter gauge slot on my table saw. To get the best alignment, its height should be the same as the thickness of the workpiece. (Don't forget to include the depth of the miter slot.) The guide is attached to the cleat with three screws and washers (see drawing at right).

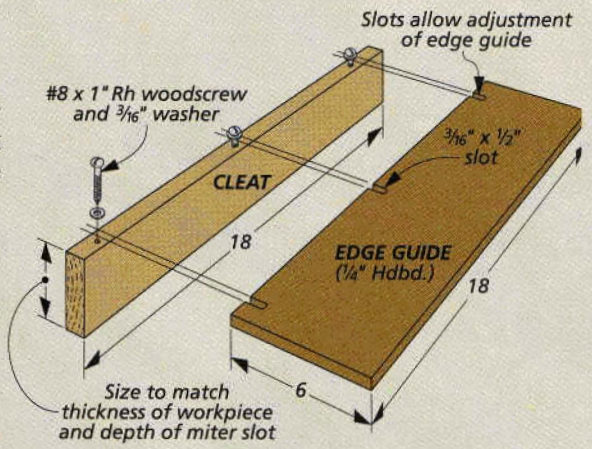

To set up the gauge, you first put the cleat in the miter slot on the right (fence) side of the blade. Slide the fence over until it contacts the guide. Slots in the guide allow you to square it to the fence (left photo below).

Next, slide the fence out of the way and place the workpiece and the taper jig between the guide and fence. Move the fence, taper jig, and workpiece toward the edge guide until the workpiece slips just under the guide. Then, adjust the fence and the taper jig until the layout line lines up with the edge guide (see middle photo below).

Once that's done, you can remove the alignment gauge and slide the workpiece, taper jig, and fence into position and make the cut (right photo below).

Serge Duclos
Delson, Quebec, Canada

▲ After squaring the guide with the fence, secure the guide onto the cleat.

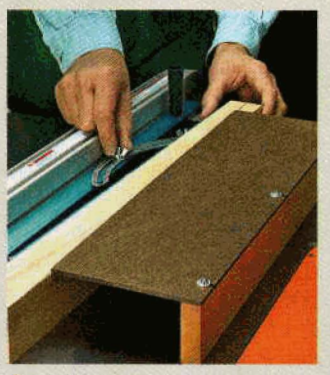

▲ Adjust the taper jig to align the layout line with the edge guide.

▲ Remove the guide and slide workpiece to the blade to cut the taper.

Quick Tips

LAMINATE LINER

To help make emptying my shop vacuum less of a mess, I wanted to line the canister with a plastic bag. But when the vacuum is turned on, the bag gets sucked into the filter.

I solved this by bending a scrap piece of plastic laminate into a tube and slipping it into the canister to hold the bag in place. It works well, yet still slips out easily when the bag needs to be changed.

Chronis Stamatiadis
Andover, Massachusetts

GLUE SQUEEZEOUT

Cleaning up glue squeezeout begins before the glue is applied. Before applying glue, I first clamp the workpieces together and rub paraffin wax across the joint lines. Then, I glue the boards up.

The wax keeps the squeezeout from adhering to the wood. And once the glue dries, it's easy to pop off with a chisel or scraper. Any wax that remains can simply be removed with mineral spirits.

Dave Richards
Rochester, Minnesota

QUICK DUST COVERS

To keep dust away from my power tools while they're sitting around, I recently started using plastic wrap covers with a built-in elastic band. You can find them in the storage aisle of many grocery stores.

Tim Reagan
Chatsworth, California

Win This Porter-Cable Variable Speed Router

That's right, send us your shop tips. If your tip or technique is selected as the featured reader's tip, you'll win a *Porter-Cable* variable speed router just like the one shown here. Send your tips and techniques to: *Woodsmith,* Tips and Techniques, 2200 Grand Avenue, Des Moines, Iowa 50312. Or send us an email message at: woodsmith@woodsmith.com.

The Winner!

Congratulations to Andrew Volk of Granite Bay, California. His bar clamp extension was selected to win the *Porter-Cable* router. The extensions double the capacity of his clamps without his having to buy more clamps.

To find out how you could win a *Porter-Cable* variable speed router, check out the information on the left.

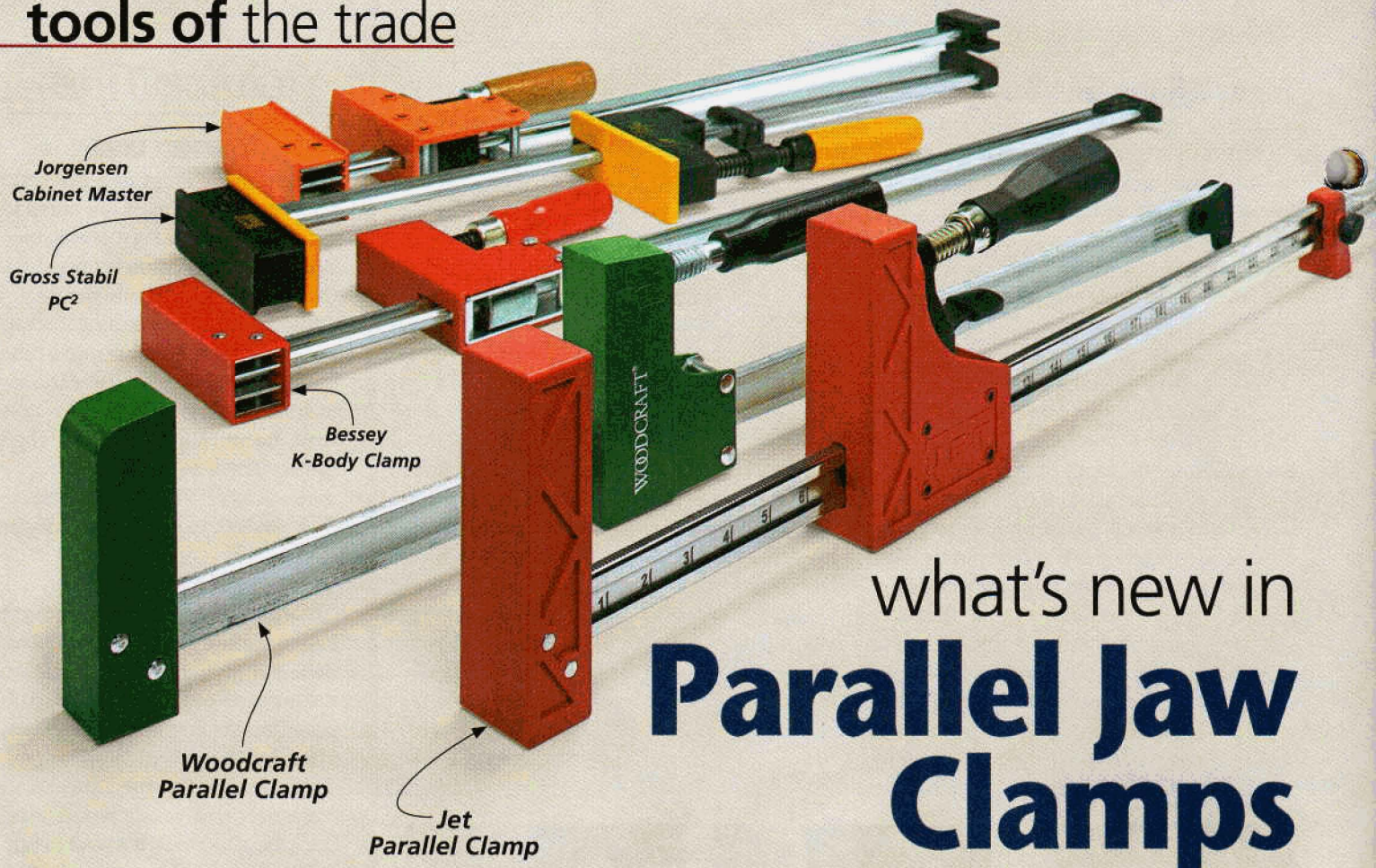

what's new in Parallel Jaw Clamps

A new design from *Jet* and a lower-priced clamp from *Woodcraft* may make you want to take another look at these heavyweights.

When it's time to glue up a panel, you may reach for your trusty pipe or bar clamps. But they have a couple of problems. The thin bar on a standard bar clamp can flex when you tighten it and the jaws may not be parallel. This can cause a panel to bow as a result (photo below).

PARALLEL JAW ADVANTAGE. Parallel jaw clamps can solve these problems. The heavier steel bar is less likely to deflect under pressure.

And pressure is what these clamps really deliver — as much as 1,000 PSI. Even under that kind of load, the jaws remain parallel and guarantee that a glued-up panel won't bow under the pressure.

Another great feature of parallel jaw clamps is the handle. It's placed above the bar (unlike pipe clamps) so that it's more accessible when the clamp is open on the workbench. And the flat head allows you to stand them on end when you've glued up a panel, as shown in the photo on the next page. You don't have to waste workbench space waiting for glue to dry.

THE ORIGINALS. You may be familiar with parallel jaw clamps from *Bessey*, *Jorgensen*, and *Gross Stabil*. They all share a similar design. But there are a couple new entries in the parallel jaw clamp arena. One has some attractive new features and the other is priced quite a bit lower than the rest of the competition.

WOODCRAFT PARALLEL-JAW CLAMP. With prices running as high as $38 for a 24-inch clamp, woodworking supplier *Woodcraft* decided to

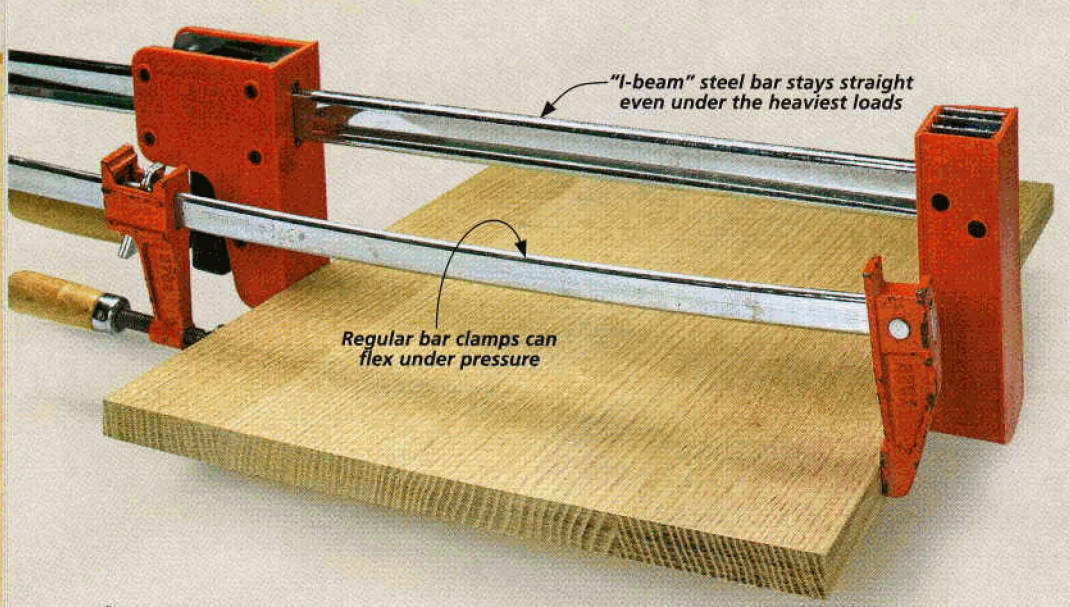

offer a lower-cost alternative. They teamed up with engineers from *Bessey* to design a new clamp to be sold under the *Woodcraft* name. Manufactured in India to *Bessey's* specifications, the *Woodcraft* clamp costs about 20% less than other brands. With the exception of the color, this clamp looks a lot like the *Bessey K-Body* parallel jaw clamp (main photo, opposite page).

The differences are subtle. Most notably the steel in the beam and the lead screw are different from the *Bessey*. While these differences may be measurable in a lab, I don't think you'll see any compromise in your shop. The clamp performs very well and is a solid value.

JET'S NEW DESIGN. The other new parallel jaw clamp is an original design. The woodworking tool manufacturer *Jet* has recently added their own clamp to the market. Although it's priced about the same as the competition, *Jet* did make a few improvements.

It might sound like a little thing, but *Jet* etched a rough scale on the bars of these clamps. I've found that having these inch marks on a clamp is very useful. Especially when you're getting ready for gluing up a panel. You can lay out the clamps on a workbench and have them opened to the right size.

The *Jet* clamp also has the best handle in the bunch. Its octagonal shape and rubberized grip make it easy to crank up the pressure.

▲ The *Jet* clamp accepts bench dogs for added versatility.

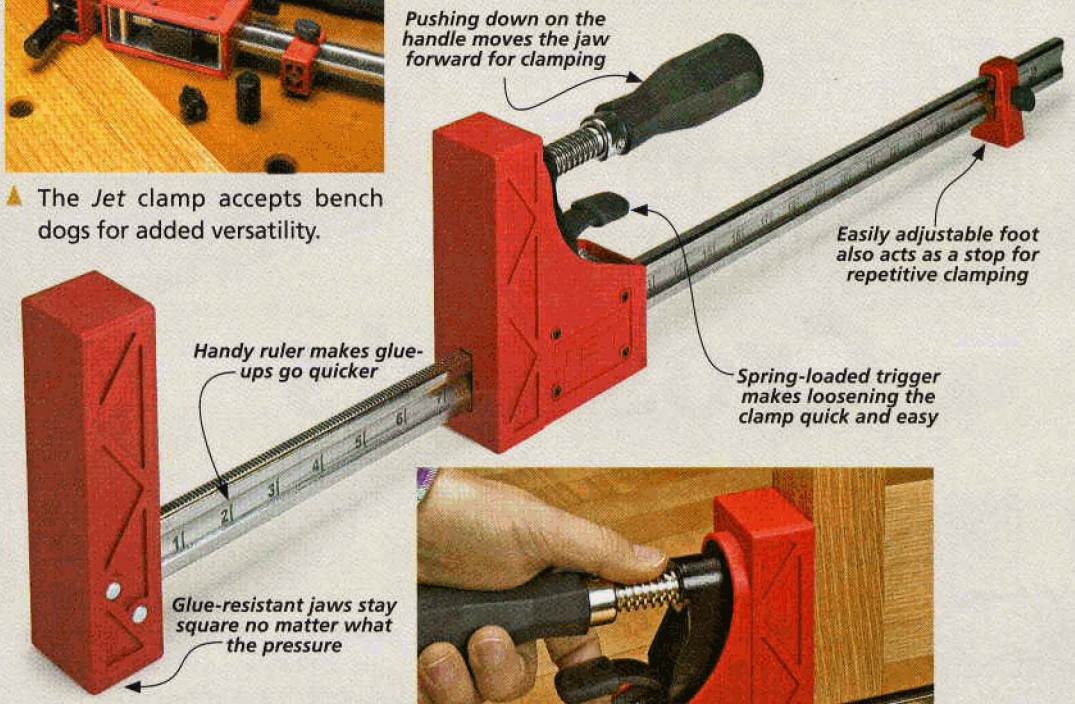

BENCH-FRIENDLY. Another handy innovation is the ability to accept bench dogs that are sold separately. The bench dogs have a stud on one end that threads into a hole in the bottom of the clamp jaw and adjustable foot (inset photo above). This makes the clamp act more like a temporary auxiliary vise.

But the new feature I really like is the trigger mechanism used to release the jaw. Unlike other clamps that rely on lifting the handle to slide the jaw, *Jet's* "trigger" eliminates the tendency for the jaw to slide shut on your fingers when you pick up the clamp. The jaw stays in place until you decide to move it.

▲ *Jet's* trigger makes adjustment easy and keeps the jaws from closing on your fingers.

BOTTOM LINE. Parallel jaw clamps may be a little pricey, but they offer a lot of advantages over traditional clamps. They're a purchase you won't regret, regardless of which brand you choose. And the choices are getting better (see Sources, page 49). But if I had to make a choice, the *Jet* clamp is really the leader of the pack in my book. In any case, you can't go wrong adding these clamps to your shop. W

▲ Parallel jaw clamps make it easy to set aside a glue-up and keep your workbench free.

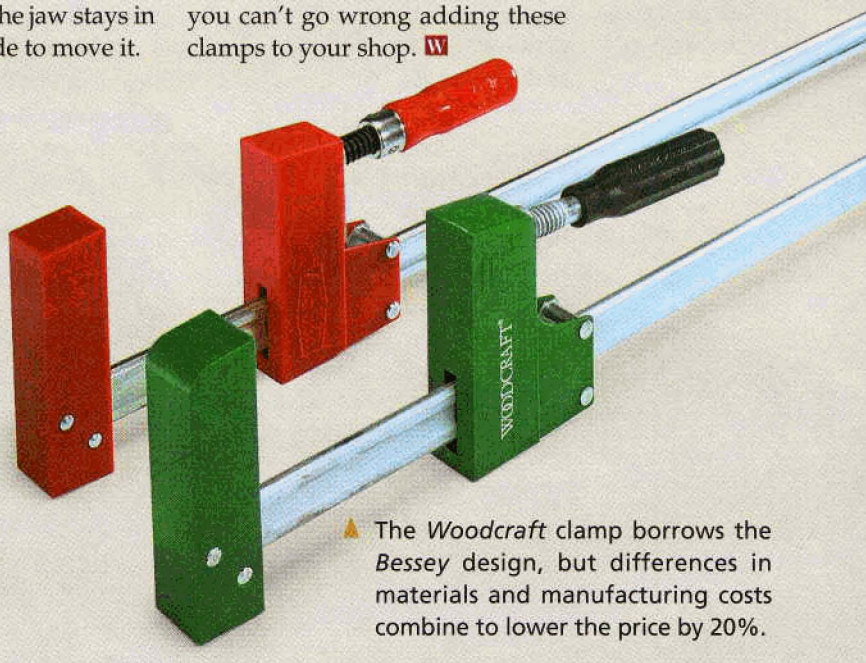

▲ The *Woodcraft* clamp borrows the *Bessey* design, but differences in materials and manufacturing costs combine to lower the price by 20%.

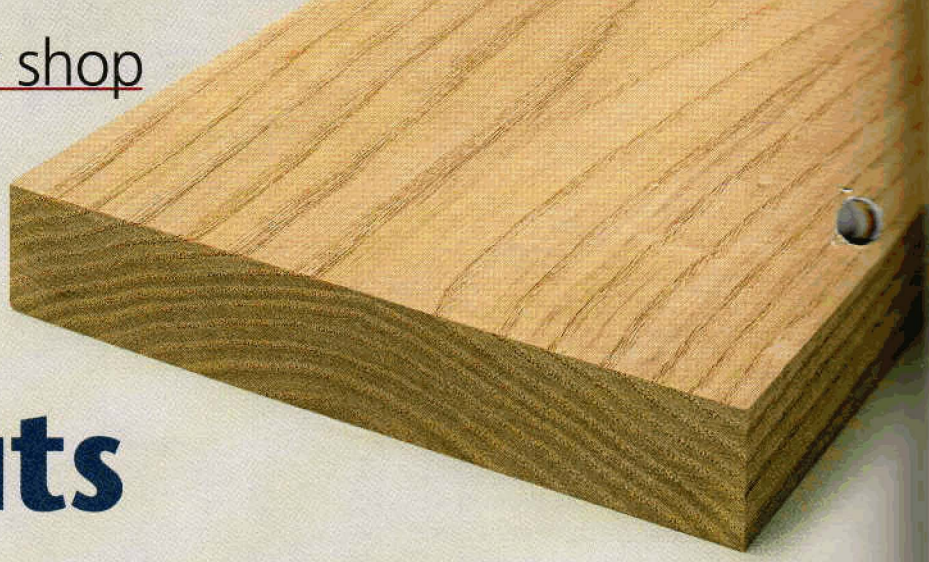

smooth, splinter-free **Crosscuts**

The table saw is the tool of choice for top-notch crosscuts. And with the right setup and technique, great results are a sure thing.

▲ This 40-tooth alternating top bevel blade is a good choice for clean crosscuts.

When I'm faced with the task of making a "finish" crosscut on a workpiece, the table saw is almost always the tool that gets the nod. And there's a good reason. At the table saw, you can get the job done quickly and accurately, and the quality of the cuts can't be beat.

THE CHALLENGE. The catch is that perfect crosscuts from the table saw aren't guaranteed. There are a number of problems that can arise. First and foremost is splintering or "chipout" at the edges of the cut. And you can add burning or rough saw marks to the list. To top it off, sometimes your crosscuts don't end up straight or square.

The good news is that you can easily cure these ailments and achieve smooth, splinter-free crosscuts. All it takes is a simple combination of the right table saw setup and a little shop-tested "know-how."

FIRST, THE SETUP

When crosscutting is the task, the first thing you want to do is make sure the table saw is set up to give you the best results. As the photo below illustrates, there are just a handful of elements to this.

THE RIGHT BLADE. It only stands to reason that the quality of cuts will be pretty dependent on the blade you use to make them. A dedicated crosscut blade is always your best bet. These blades often have 60 or more teeth with alternating bevels. But a high-quality combination blade, like the the 40-tooth *Forrest* blade shown at left, will also give you top-notch results.

A ZERO-CLEARANCE INSERT. You'll notice below that the blade is "surrounded" by a zero-clearance insert. This serves two purposes. First, it helps prevent chipping by supporting the workpiece right up to the edge of the cut. And second, it prevents narrow cutoffs from becoming trapped between the blade and the insert, resulting in dangerous kickback or possibly ruining the cut.

AN AUXILIARY FENCE. An auxiliary fence attached to the miter gauge has quite a number of benefits. Mainly, the longer bearing surface gives you easier and more positive control of the workpiece during the cut.

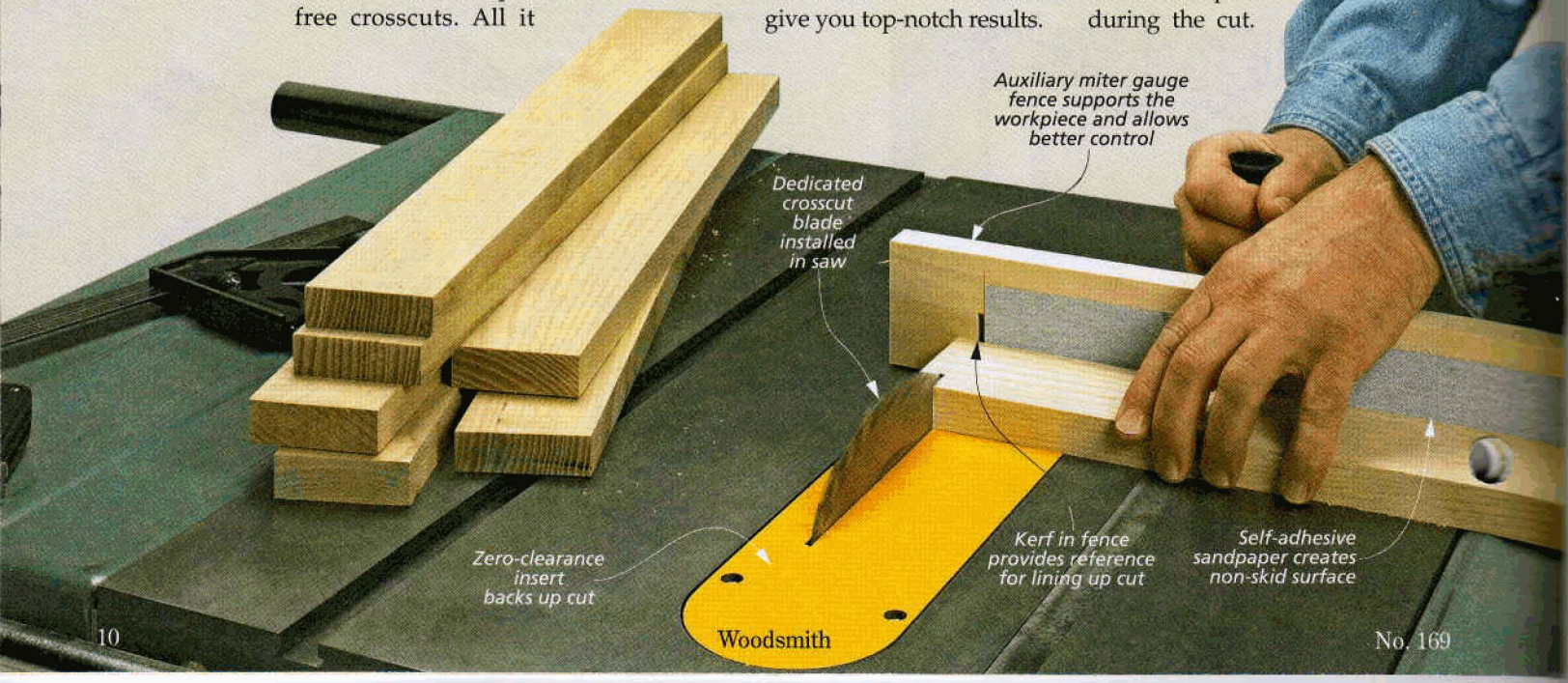

It also provides a means to clamp the workpiece or attach a stop block. (A strip of adhesive sandpaper stuck to the fence creates a non-skid surface.)

The auxiliary fence I use extends past the blade. This means the cut is backed up and the workpiece is fully supported on both sides of the blade. A bonus is that the kerf in the fence gives you a ready reference for lining up the cut.

NEXT, THE CROSSCUT

With this setup in place, you've started down the right track. Now, it's simply a matter of using good technique to make the cuts. There are just a few fine points to this that the drawings at right illustrate.

BLADE HEIGHT. Before making the cut, you'll need to adjust the height of the blade. I've found that when the blade is about ¾" above the top surface of the workpiece, I get the smoothest cut. At this height, the cutting action of the teeth is directed downward, and fewer teeth are in the cut at one time. The workpiece will be easier to hold down, the sawdust will clear more quickly, and there will be less friction.

GOOD FACE UP. There's one more thing to think about before turning the saw on. Workpieces often have a "show" face and a back face, and I always mark which one is which. When making the cuts, you want the good face up, if possible. This will limit any chipout to the unseen face of the workpiece.

FLIP THE SWITCH. Now you're ready to make the crosscut. At this point, the key to a smooth cut is in how you feed the workpiece. First, you want to have a firm grip, holding the workpiece tightly against the miter gauge. The auxiliary fence and its sandpaper facing help with this, but you have to do the rest.

You'll find that the cutting force often makes the workpiece "wander" into or away from the blade during the cut, resulting in a rough, inaccurate crosscut. So if I have trouble controlling a workpiece (wider pieces can be a challenge), I enlist the help of a clamp. You can clamp the workpiece directly to the fence or clamp a stop block to the fence to keep the workpiece in place.

A STEADY FEED. When you feed the workpiece through the blade, keep it moving steadily. You have to let the saw, the thickness of the stock, and the hardness of the wood dictate how fast you feed. Burning will tell you you're feeding too slow — too fast and you'll see rough saw marks and heavy chipout. I try to never stop during a cut. You'll usually get burning or visible saw marks at the stopping point. But I like to slow down just a bit as the blade starts to exit the cut. This can help avoid chipping along the back edge of the workpiece.

COMPLETING THE CUT. To preserve the clean edge, avoid the temptation to quickly pull the workpiece back along the edge of the saw blade after completing the cut. Instead, slide the workpiece away from the blade before returning. If the workpiece is clamped or a stop block is in place, I'll turn the saw off rather than risk ruining the cut.

FINAL TIPS. That covers the basics. But I do have a few tips to offer that help me get better crosscuts.

First, whenever possible, I like to take a full "cutoff" rather than just a "trim" cut. This way, the blade is cutting a full-width kerf, and it will run truer, giving you a cleaner, smoother cut. Sometimes, you can't avoid making a cut of less than a blade's width. And when this is the case, I try to make the final, finish cut as light as possible. You'll see fewer saw marks and less chipping.

For safety reasons (and to keep from ruining a workpiece), I don't let cutoffs pile up close to the blade. They can easily "vibrate" into the blade and be kicked back at you. This can result in quite a scare or an injury and may damage any workpiece you're crosscutting.

Finally, no matter how careful you are, some workpieces will chip. If a perfect cut is a must, there are a couple of tricks you can resort to. One is to use a sharp knife to score the line of the cut before running it through the saw. This will guarantee a clean edge. A second solution is to place masking tape firmly over the line of the cut. The tape backs up the fibers at the edge of the cut to keep them from tearing loose.

I won't deny that crosscutting workpieces on the table saw seems like a pretty run-of-the-mill task. But for me, that's the best reason to make it one that ends in perfect results every time. W

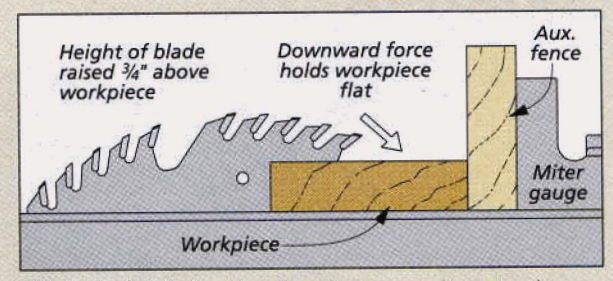

Blade Height. *You'll get a cleaner, easier cut when the cutting action of the blade is downward.*

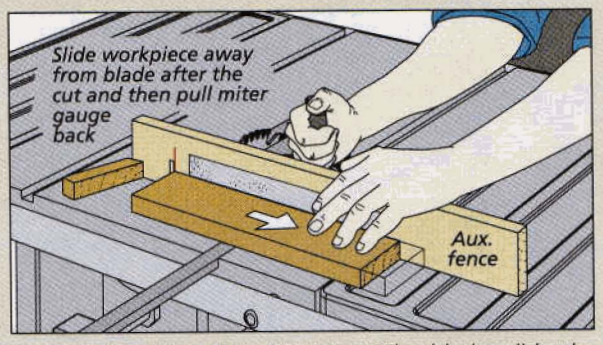

Completing the Cut. *Once past the blade, slide the workpiece away and then return the miter gauge.*

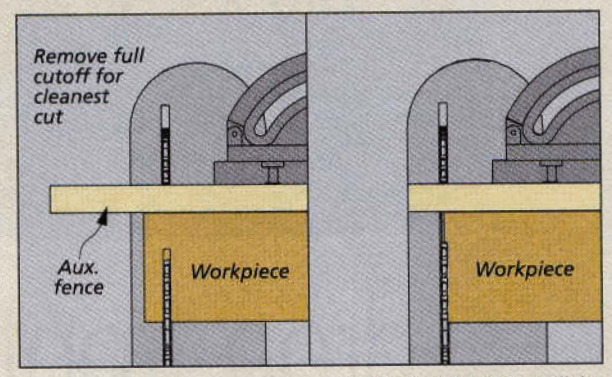

A Full Cut. *A full cut, as in the left drawing, will be smoothest. A very light finish cut is next best (right).*

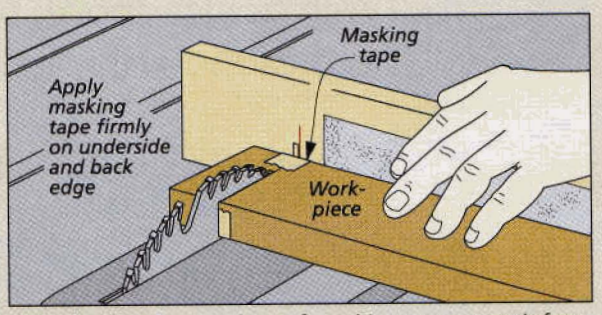

"Mask" the Cut. *A piece of masking tape can reinforce wood fibers for a chip-free crosscut.*

drop-front Storage Center

With storage above, below, and inside, this simple project allows you to organize all the items you never seem to have a place for.

▲ The false-drawer front of the storage center drops down to reveal lots of storage for small items, while the double hooks underneath provide a good place to hang coats, scarves, and hats.

At first glance, this storage center appears to have four small drawers to go with its four coat hooks. But a closer look reveals that these "drawers" aren't really drawers at all. As the photo on the left shows, they disguise a drop-front door that hides plenty of storage for hats, sunglasses, gloves, or other items.

The construction is fairly straightforward. You only need a few boards and some hardware to get the job done. The joinery is simple to make, including a clever way to allow the front to drop down. All the joinery can be cut with your table saw and router.

What I like about this storage center is that it's a small project that you can build in a weekend. Yet, it provides big storage and organization to any entryway. And if the country pine look is not for you, we've also included a couple of different design options in *Designer's Notebook* on page 17.

CONSTRUCTION DETAILS

OVERALL DIMENSIONS: 34½"W x 8⅜"D x 12¼"H

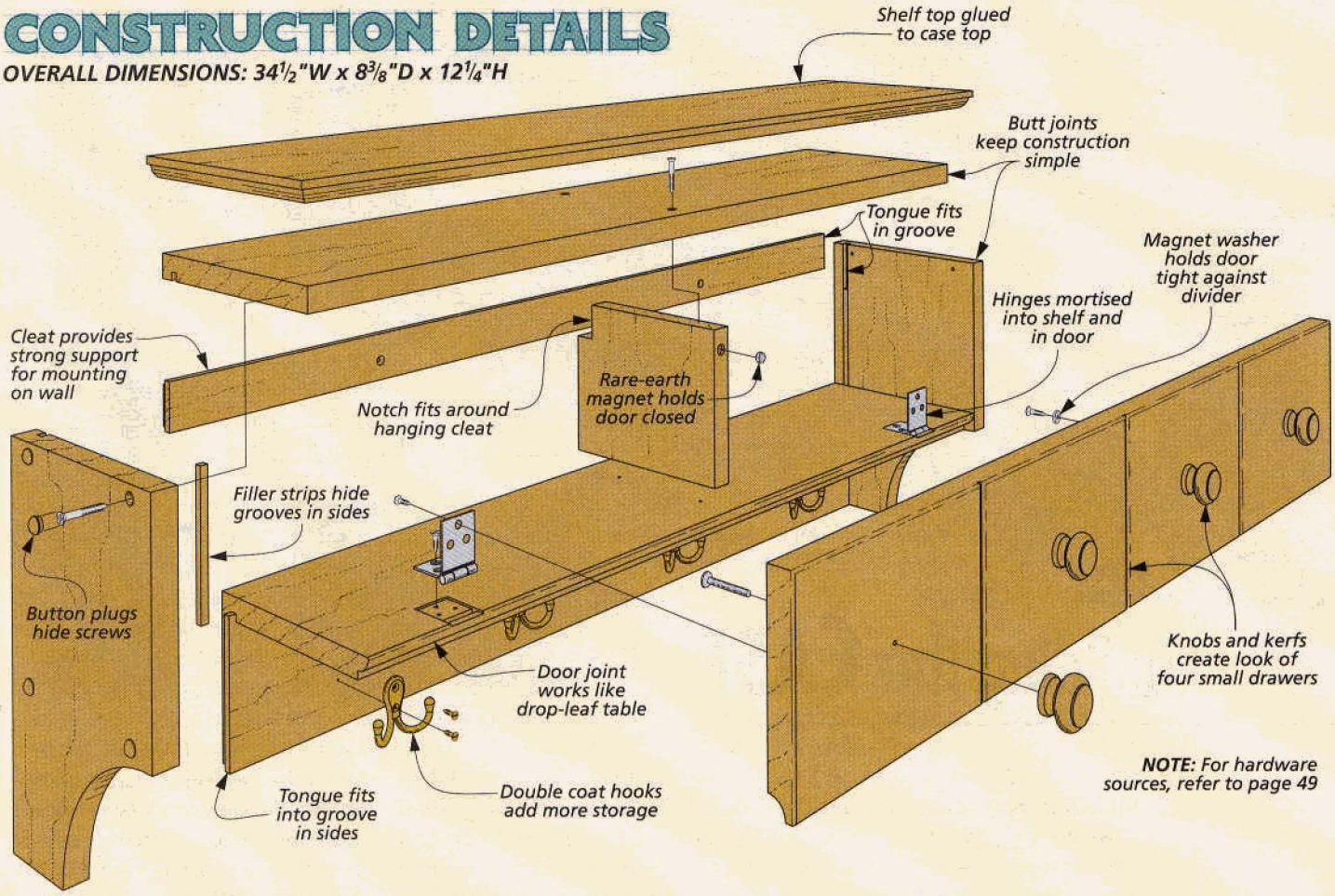

NOTE: For hardware sources, refer to page 49

Materials, Supplies & Cutting Diagram

A	Case Top (1)	¾ x 7¼ - 31½
B	Case Bottom (1)	¾ x 7¼ - 31½
C	Case Sides (2)	¾ x 7¼ - 11½
D	Divider (1)	¾ x 6¾ - 5½
E	Back (1)	¾ x 4¾ - 32
F	Hanging Cleat (1)	¾ x 1½ - 32
G	Filler Strips (2)	¼ x ¼ - 4¾
H	Door (1)	¾ x 5⁹⁄₁₆ - 31⅜
I	Top (1)	¾ x 8 - 34½

- (12) #8 x 1¼" Fh Woodscrews
- (2 pr.) 1¼" x 1½" Drop-Leaf Hinges w/Screws
- (4) 1¼"-dia. Wood Knobs w/Screws
- (10) ⅜"-dia. Button Plugs
- (1) ⅜"-dia. Rare-Earth Magnet
- (1) ⅜"-dia. Magnet Washer
- (1) #6 x ⅝" Fh Woodscrew
- (4) Brass Double Coat Hooks w/Screws

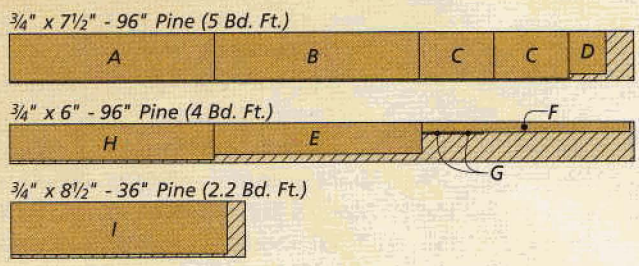

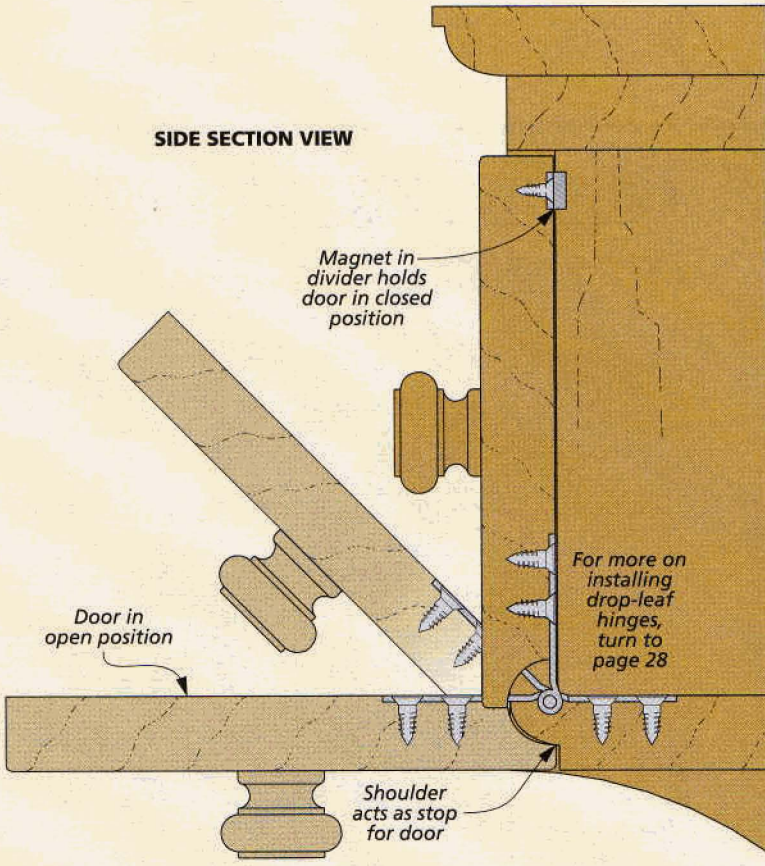

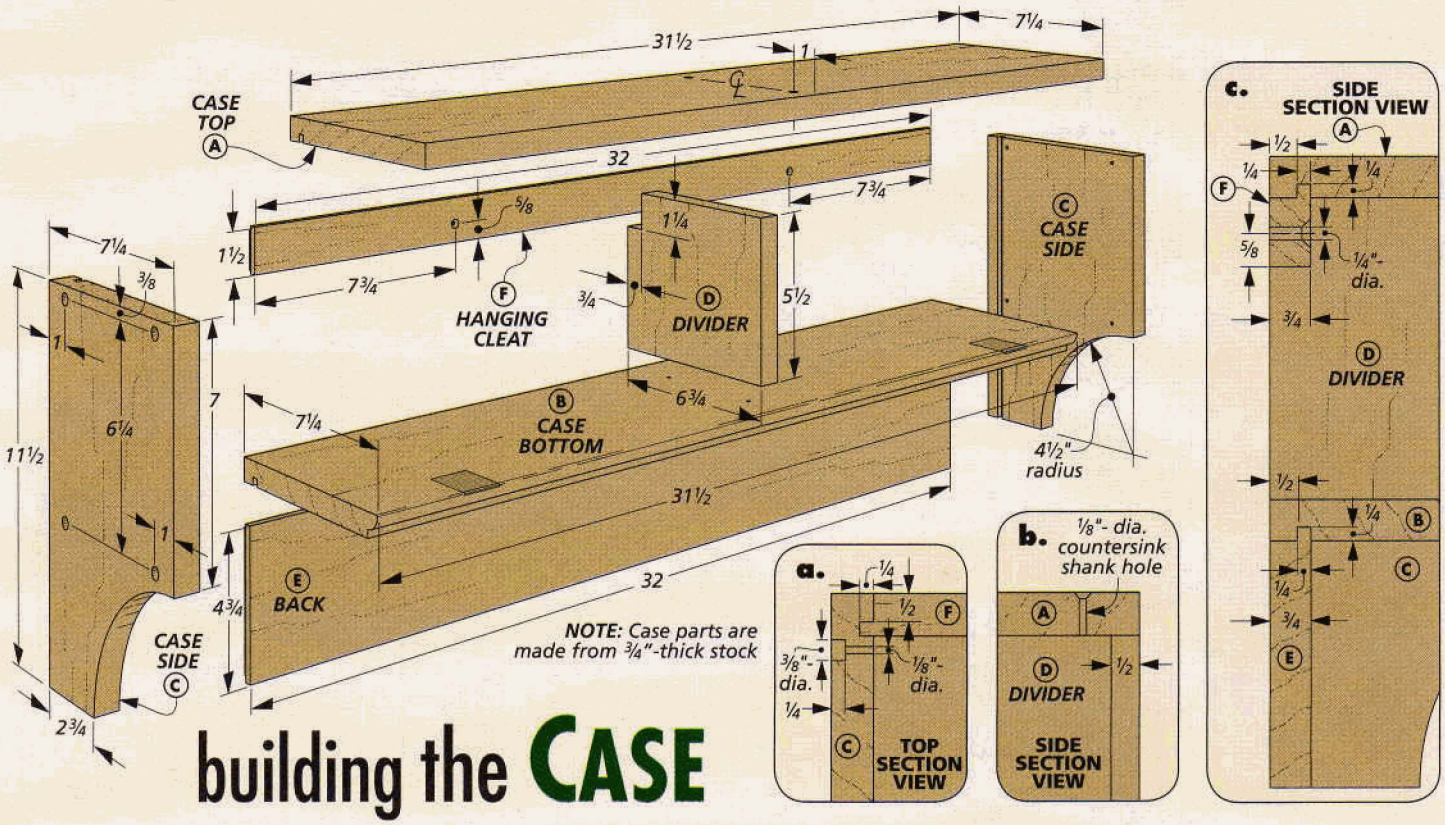

building the CASE

If you take a close look at the drawing above, you'll see how the case goes together. It's made up of seven parts: a top and bottom, two sides, a center divider, a cleat to attach the shelf on a wall, and a back for some hooks.

To keep the project simple, the two side pieces are just screwed to the case top and bottom. But on the inside, there's some tongue and groove joinery to add stability. And since the sides, top, and bottom of the case have the grooves in them, that's where I started.

TONGUE AND GROOVE. The first step is to cut out the top, bottom, and sides. After that, it's over to the table saw to cut the grooves. I start with the grooves because it's easier for me to cut the tongues to fit the grooves than the other way around. The left drawing in the box below shows how I cut them. These grooves will hold the tongues in the hanging cleat and the back, as you can see details 'a' and 'c' above.

Now, you can set the sides, top, and bottom aside to start working on making the hanging cleat and the back. As I said earlier, you'll need to cut tongues on these parts to fit into the grooves you just made.

The two right drawings in the box show how to cut the tongues. But a trick I've learned is to "sneak up" on the fit. Since the grooves are already made, you'll want to purposely cut the tongues a little thick to start. Check the fit in the grooves, then raise the blade a bit and trim a little more material off the tongue. Repeat this process until the tongues fit snugly in the grooves.

CURVED PROFILE. With the tongues and grooves cut, you can go ahead and work on the curved profile on the bottom of each case side. Laying out the curve isn't difficult — just draw a 4½"-radius arc on one side. Then, to make sure the curve will match exactly on both side parts,

How-To: Tongue & Groove

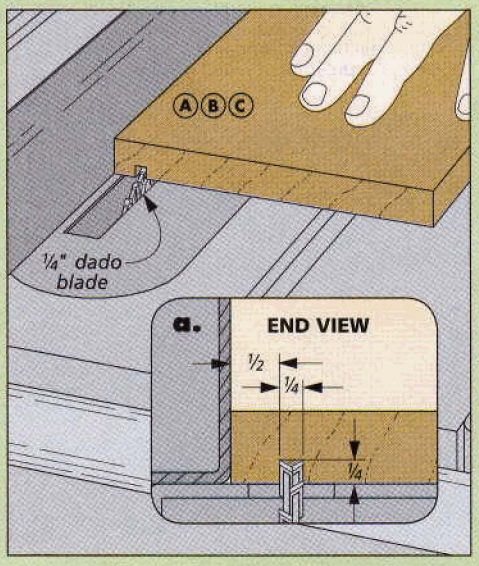

The Groove. *Once you have the fence and dado blade set up, you can cut the grooves in the sides, top, and bottom.*

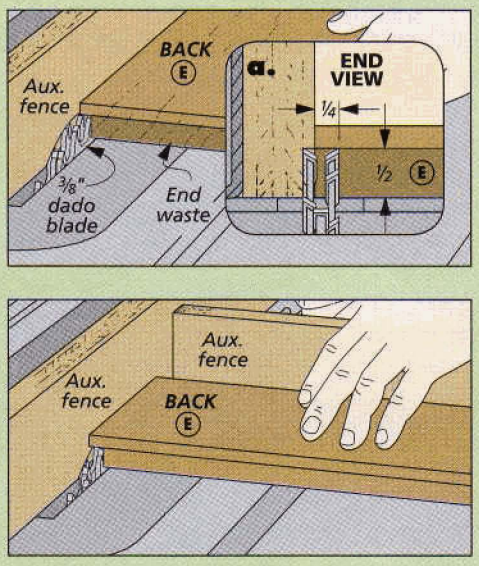

The Tongue. *I used a dado blade buried in an auxiliary rip fence to cut the tongues on three sides of the cleat and the back.*

you can tape the sides together before making the cut.

Once the curve is laid out, you can cut it out with a band saw (see Shop Tip on the right). When making these types of cuts, I like to stay on the waste side of the layout and then sand up to the line with a drum sander. This way, I end up with smooth curves that are the same on both side pieces.

SCREW HOLES. After the curves are sanded smooth, this will be a good time to drill the holes for the screws that will hold the case together (detail 'a'). You can also do the same with the case top and bottom that will hold the center divider you'll make later (detail 'b'). After the holes are drilled and counterbored, it's a good time to start work on the rule joint for the door.

RULE JOINT. One of the features I like about this project is how the door works. It's similar to a drop-leaf table, only upside down.

But this is done for more than just looks. A rule joint allows the weight of the door to be distributed evenly along the edge of the case bottom, not just on the hinges. (The Side View on page 13 illustrates this.)

The joint combines two matching profiles: a roundover on the case bottom and a cove on the door. When the door is lowered, the cove wraps around the roundover and rests on the shoulder. The box below shows how to set up to rout the roundover. I'll talk about routing the cove on the door later.

THE DIVIDER. With the case parts complete, you can move on to the divider. After cutting it to size, all you have to do is cut a notch that allows it to fit around the cleat (see main drawing on opposite page).

WRAPPING UP. Although the case parts are complete and ready for assembly, I held off putting it together for now. For one thing, it'll be easier to test and adjust the rule joint while everything is apart. And you'll need to align the drop-leaf hinges between the door and the case bottom, as illustrated in the photo on the right below and in Shop Notebook on page 28.

So just set these parts aside for now to start working on the door.

Shop Tip: Curved Profile

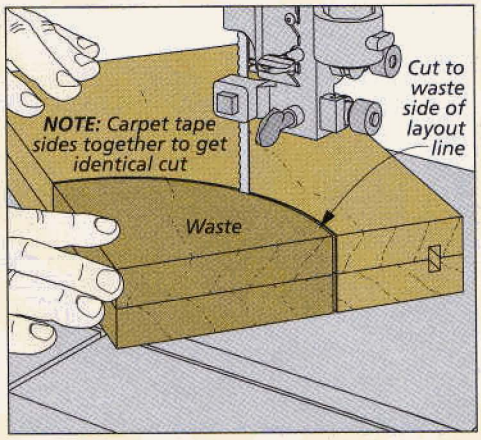

Curve on the Band Saw. *Stay on the waste side of the layout line to cut the curve in the sides of the storage center.*

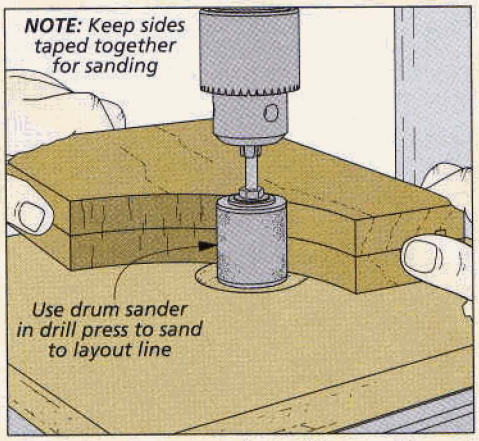

Finish at Drum Sander. *With the sides still taped together, use a drum sander to smooth both sides to the layout lines.*

How-To: Bottom Edge Profile

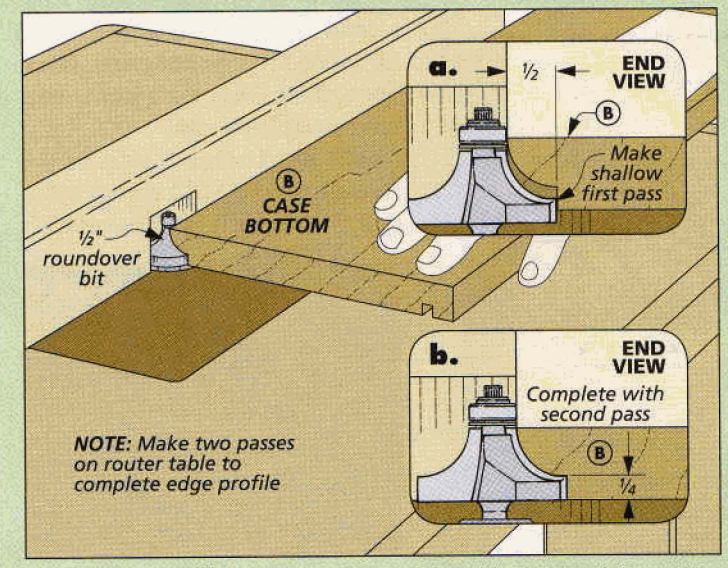

Rule Joint Profile. *To prevent tearout and burning while routing the roundover on the case bottom, make a shallow pass first, then raise the bit to complete the profile.*

Refer to Shop Notebook on page 28 for more information on installing the drop-leaf hinges for the door.

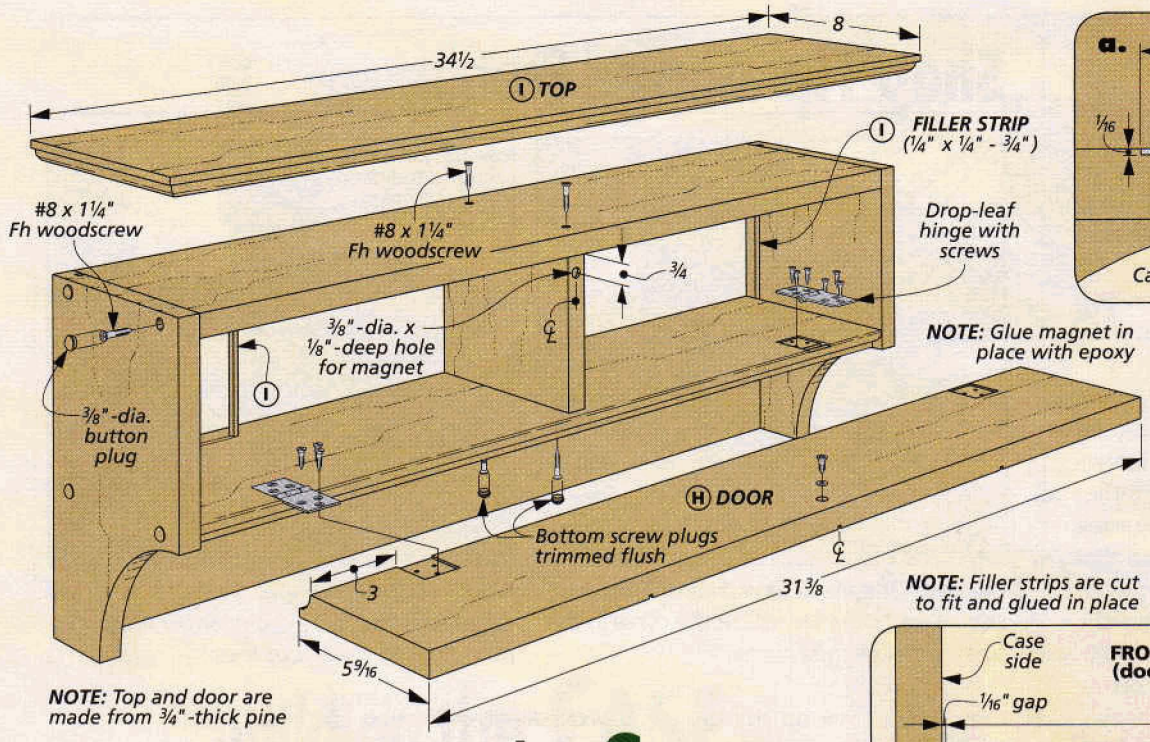

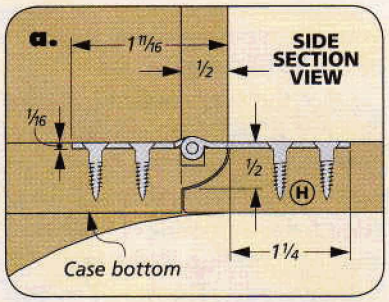

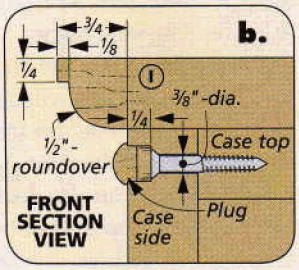

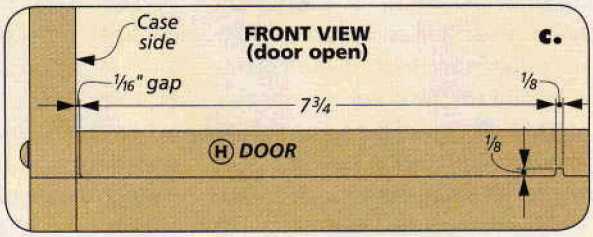

completing the SHELF

With the case parts done, it's time to add the final touches. There's a fair amount of work to be done to the door, like completing the rule joint, routing the hinge mortises, and making the "drawers." So that's a good place to start.

DROP-FRONT DOOR. After cutting the door to size, the first step is to rout a cove on the bottom edge of the door (see left drawing below). The cove will mate with the roundover routed on the front edge of the case bottom to create the rule joint.

HINGE MORTISES. The next thing to do is rout the mortises for the hinges. To make sure the mortises in the door and bottom were aligned, I laid the door in front of the bottom and marked where they should go (see main drawing and detail 'a' above). Shop Notebook on page 28 shows how to mark the locations of the hinges and install them.

MAKE THE "DRAWERS." Once the mortises were cut, I started work on the false drawers. The idea here is to cut equally spaced kerfs in the door to give the appearance that the storage center holds four drawers (see detail 'c' above and the right drawing in the box below).

Before assembling the case, there are a couple more things left to do. First, drill holes for the knobs (drawing on opposite page). And second, install a magnetic catch (detail 'a' on opposite page). Once these things are completed, you can assemble the case.

SHELF TOP. The next step in the construction is to add the top to the case. I routed a ½" roundover with

How-To: Door Shaping

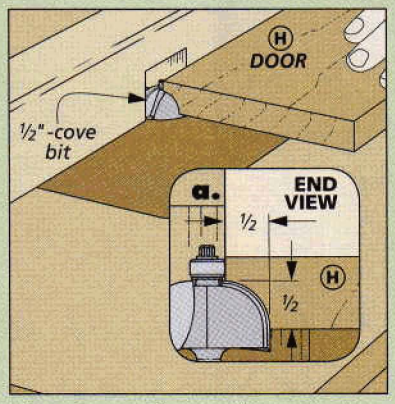

The Cove. *The profile routed on the bottom of the door should mate with the edge of case bottom.*

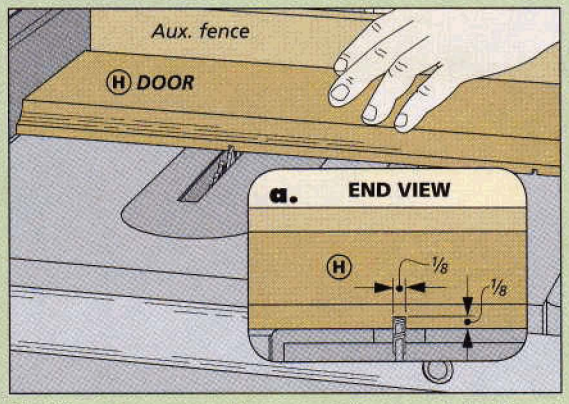

Cutting Drawers. *Three evenly spaced kerfs cut into the front of the door creates the illusion that the storage center contains four small drawers.*

▲ Distressing the finish gives the storage center a comfortable, time-worn appearance.

a shoulder along the front edge and the sides (detail 'a'). Then, you can simply glue the top to the case.

FILLER STRIPS. There's one final detail before moving on to the finish. Some of the grooves you cut earlier are visible on the inside of the case. Although it's not a big deal, I decided to glue in filler strips to give it a more finished look. Now, you're ready to move on to the finishing stage.

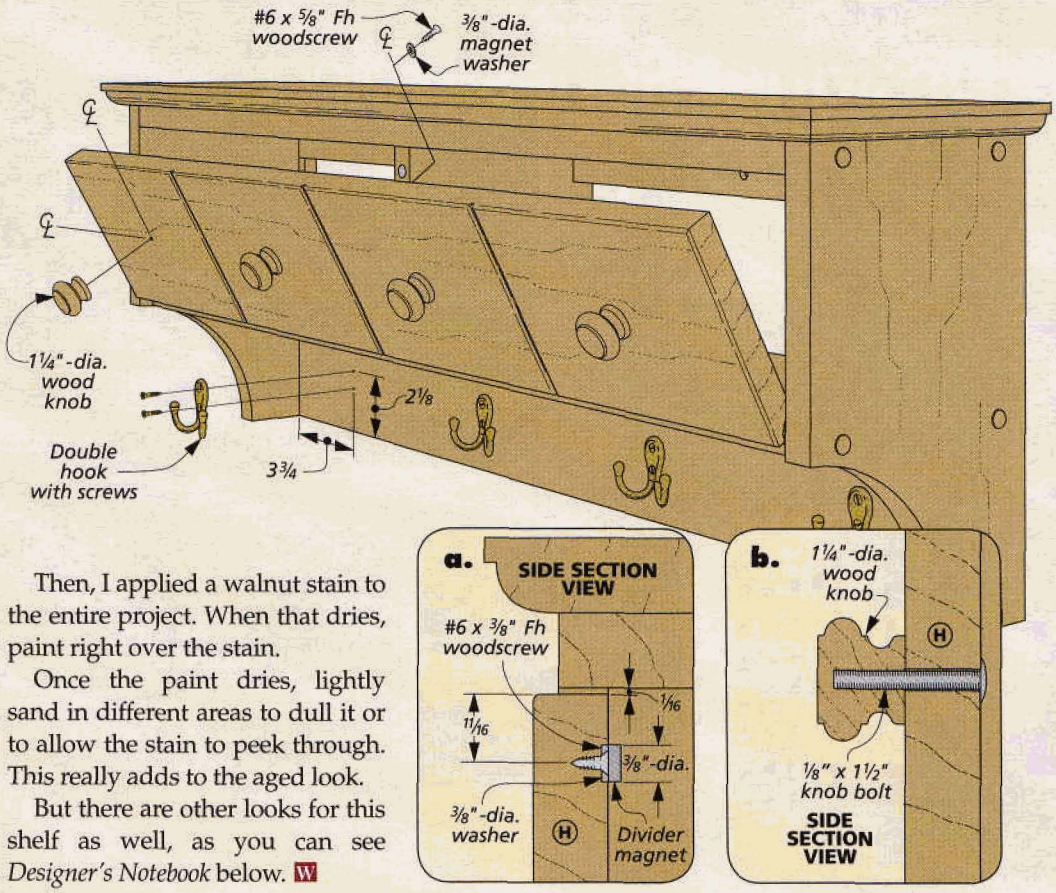

BACK PANELS

To give the shelf an antique look, I decided to "distress" it. What that means is taking a couple of tools or a ring full of keys and drop them randomly on the storage center. But don't get carried away — you want it to look old, but not beat up. I also softened some of the edges to add to the worn appearance (see photo on the opposite page).

Then, I applied a walnut stain to the entire project. When that dries, paint right over the stain.

Once the paint dries, lightly sand in different areas to dull it or to allow the stain to peek through. This really adds to the aged look.

But there are other looks for this shelf as well, as you can see *Designer's Notebook* below. W

DESIGNER'S NOTEBOOK

Two Optional Designs

While working on this project, I couldn't help but think of all the different design options that could easily change the look of this project. A couple of ideas are shown in the drawings here.

For a more traditional look, you can change the edge profile of the top, add wood pegs, and cut an ogee profile in the sides. The detail drawings can help you with that.

Or, go with the straight lines shown in the drawing below for a clean, contemporary look.

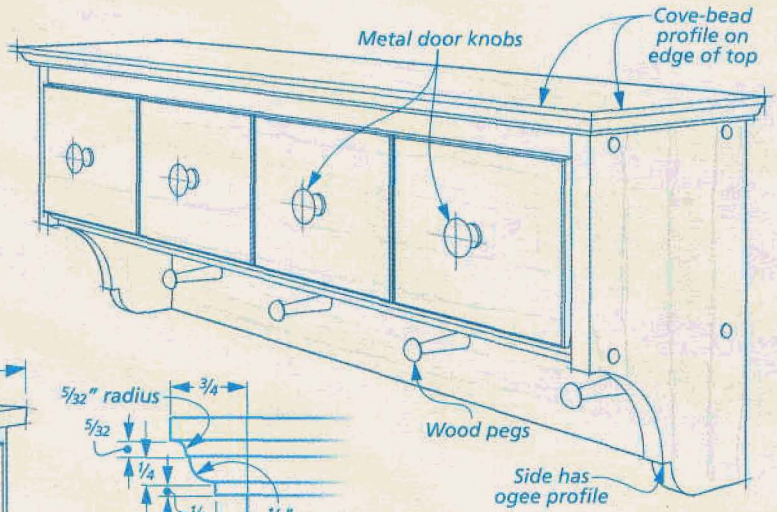

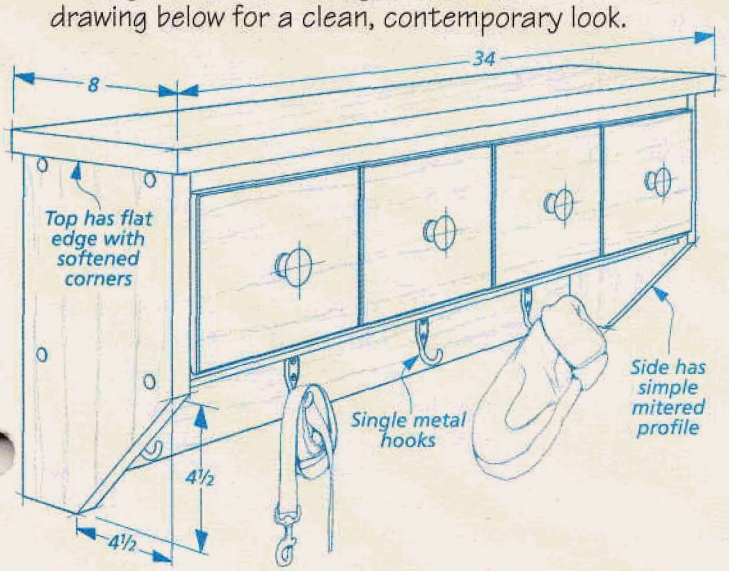

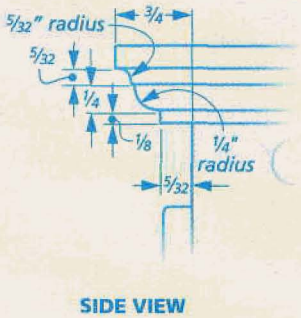

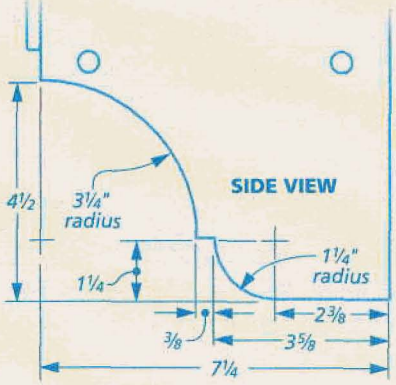

contemporary Wide-Screen TV Cabinet

Simple lines, classic joinery, and lots of storage combine to make this project both functional and great-looking.

Televisions have changed a lot over the years. So it's only natural that the cabinets and stands that house them have also changed. The sleek, low-profile design of this TV cabinet fits right in with the new flat-panel televisions. Your television will look right at home sitting on top or mounted on the wall behind the cabinet

If you look at the photo, you'll see it's wide enough to handle most large LCD or plasma TV screens. And down below, there's no lack of space for all your electronic equipment. Behind the lattice doors, there are adjustable shelves. The large drawer adds even more storage for your expanding DVD collection.

As nice as it looks, what you'll really appreciate is how easy it is to build. It's a simple plywood case trimmed out with a solid wood top, face frame, and base. And the lattice doors finish it off for a great look in any room.

CONSTRUCTION DETAILS

OVERALL DIMENSIONS:
75"W x 20"D x 28"H

Solid wood top supports heavy loads

Dado joints and screws secure partitions in case assembly

Plywood back has cutouts for wiring and ventilation

Center sections provide easy access to electronic components

Tongue and dado joints make a strong case assembly

Different thickness of rails and stiles creates an offset joint

Hardwood face frame covers plywood edges

Solid wood base is attached to case with cleats

Large drawer uses rabbet joinery for fast construction

Pocket hole joinery makes a strong base assembly

Offset stub tenon and groove joinery adds visual interest

Euro-style cabinet hinges mount on spacer blocks

Lattice pieces are easy to make on the table saw

▲ For an attractive option, you can build doors with frosted glass panels. For details, go to www.Woodsmith.com.

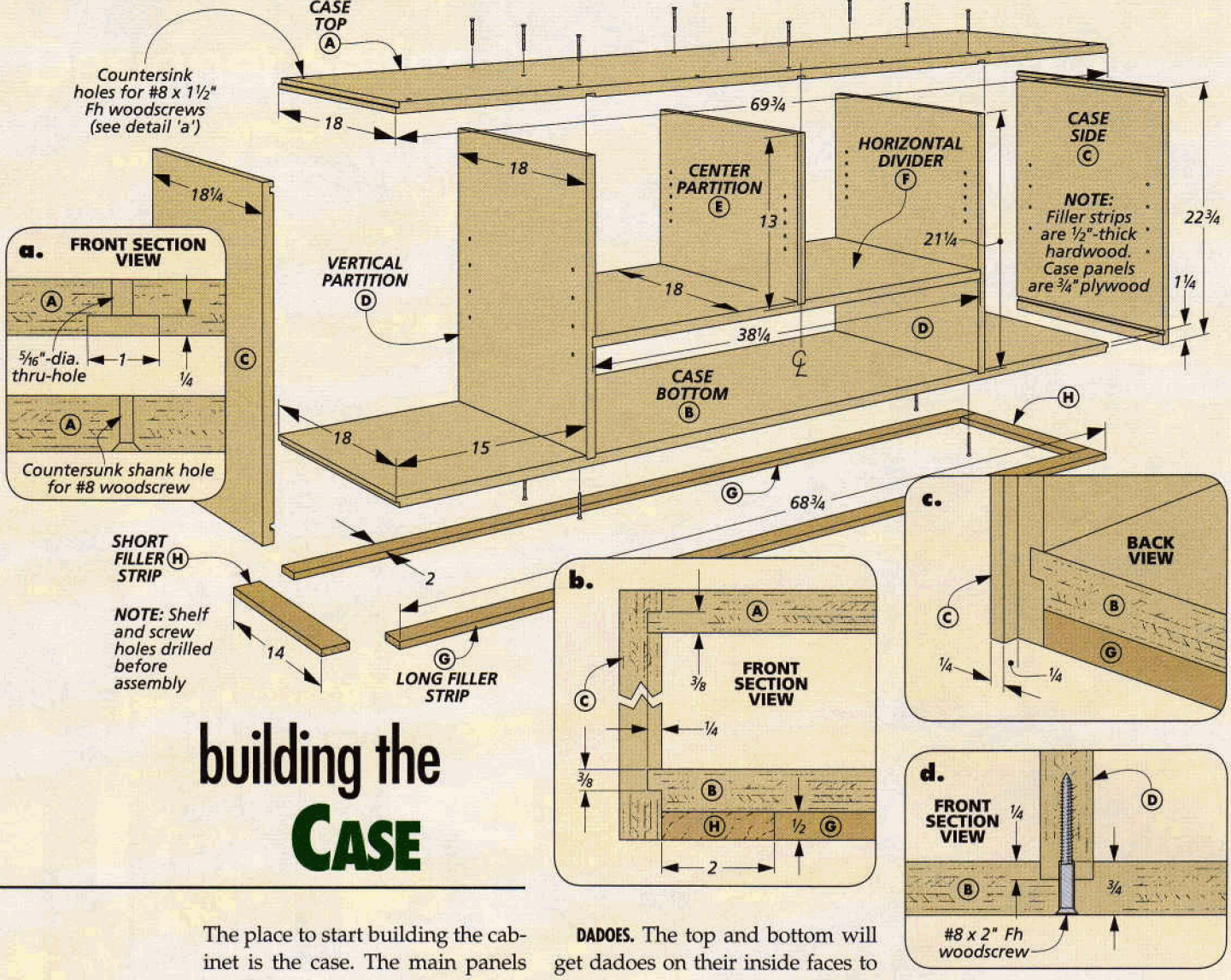

building the CASE

The place to start building the cabinet is the case. The main panels are all cut from cabinet-grade plywood. (I used white ash.) Simple joinery keeps everything square and easy to assemble.

BUILDING THE BOX. I started by cutting the top, bottom, and side pieces to size. After that's done, it's time to get out the router to start on the dadoes and rabbets for the joinery.

DADOES. The top and bottom will get dadoes on their inside faces to house the vertical partitions (see drawing above). To make sure that the top and bottom dadoes lined up, I clamped both pieces side-by-side, laid out the dadoes, and then routed them with a straight bit.

You can see in the drawing above that the top piece had an additional dado to house the center partition. So you'll want to rout this dado while you've got things set up.

TONGUES AND DADOES. Now you can switch to a rabbeting bit and cut the tongues on the ends of the case top and bottom, as shown in detail 'a' above. While you're at it, rout a rabbet on the back edge of the side pieces for the back panel. Then change over to a straight bit to rout the matching dadoes in the two sides. Just be sure to locate the bottom dado so that you can add the filler strip (detail 'b' above).

HOLES. Before gluing up the case, you can go ahead and drill the holes in the top and bottom pieces that will be used for attaching the partition assembly (drawing at left). You'll also need to drill holes in the sides for shelf pins (lower drawing, opposite page). Once that's done, you can glue up the top, bottom, and two sides then start to work on the internal partitions.

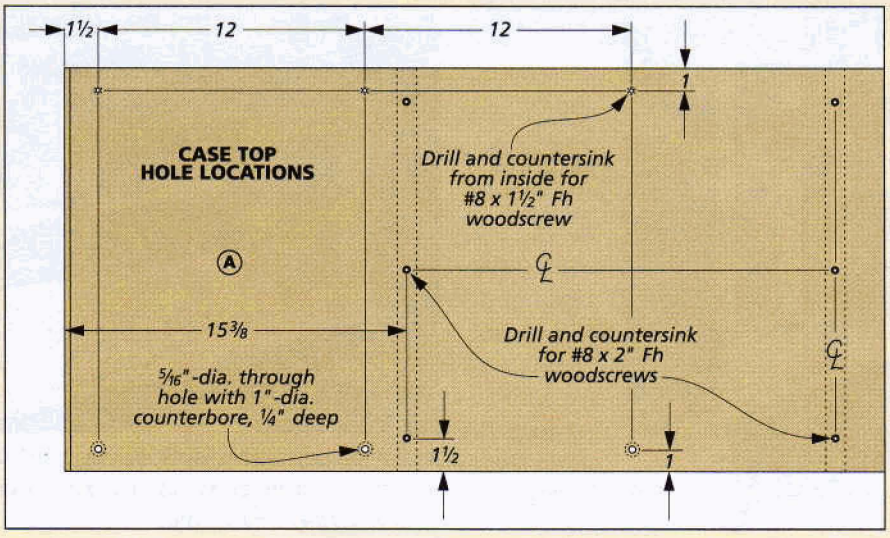

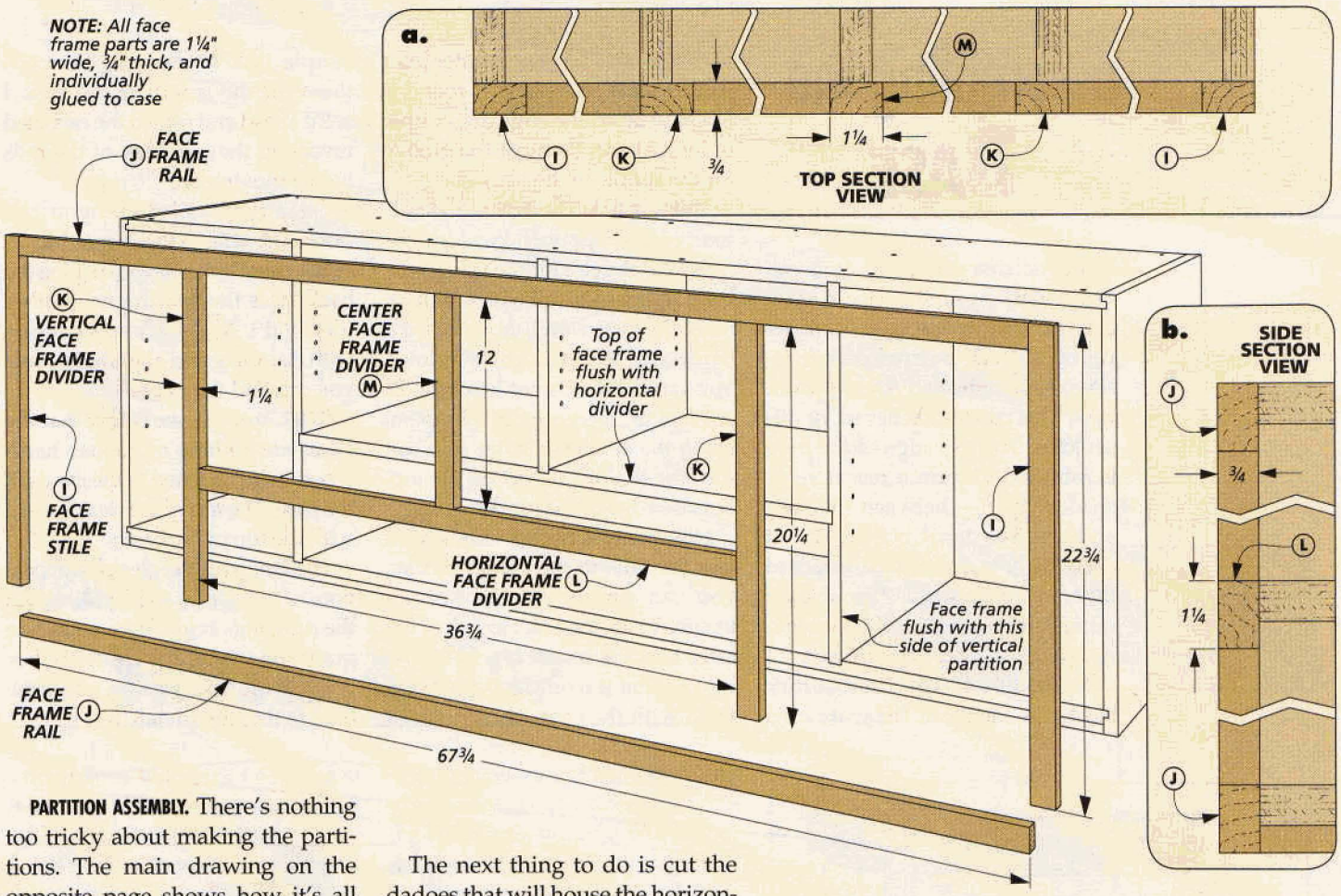

PARTITION ASSEMBLY. There's nothing too tricky about making the partitions. The main drawing on the opposite page shows how it's all assembled. The two taller, vertical pieces are cut to fit between the dadoes of the case top and bottom. A horizontal divider fits in dados on the two vertical pieces. And there's a center, vertical partition that divides the upper space.

PARTITIONS. I started by cutting the two long, vertical partitions to size. The goal was to get a snug fit in the dadoes of the case.

The next thing to do is cut the dadoes that will house the horizontal divider. Then you can slide the vertical pieces into the case and cut the horizontal divider to fit. The last step is to cut a centered dado on the horizontal divider to hold the short, center partition.

SHELF PIN HOLES. Before fastening the partition pieces in the case, it's a good idea to drill all of the holes for the shelf pins (see drawing below). The trick is laying out the holes on the proper face of the workpiece. All of the holes are stopped holes except for those in the short, vertical partition. These holes can be drilled all the way through.

Finally, you can glue the partition pieces into the case and fasten them in place with screws. Now is when you'll want to make sure everything is square before you move on to adding the face frame.

FACE FRAME. The face frame shown above is pretty straightforward. What's nice is you don't have to preassemble the entire frame then try to make it fit. Each piece is cut to fit and glued in place separately.

I started with the two end stiles, making sure they were flush on the outside edges, top, and bottom. Then you can cut the two long horizontal rails to fit between the stiles and glue them in place. Next, I trimmed out the vertical partitions, followed by the piece that covers the horizontal divider. Finally, you can add the shorter, vertical piece to the center partition. Next, you'll turn your attention to the base.

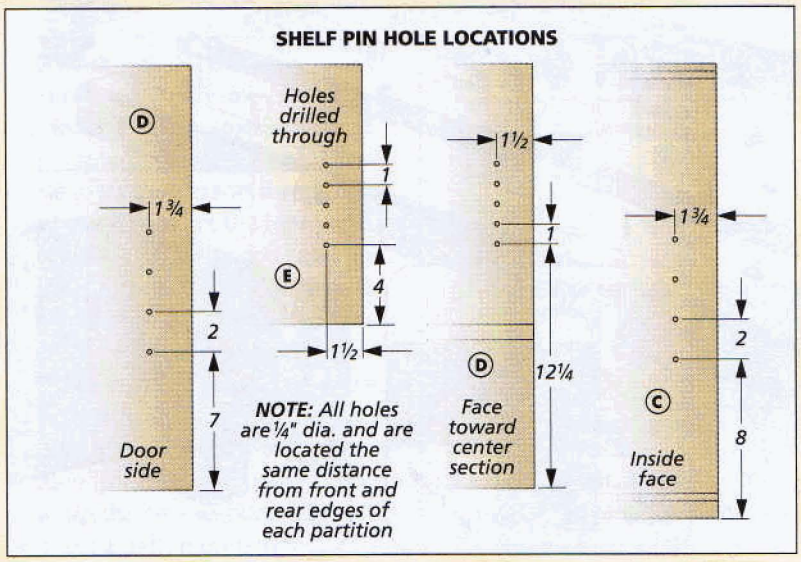

assembling the BASE

With the case complete, you can begin working on the base. As you can see below, the base is made up of ⅞"-thick mitered corner assemblies connected by ¾"-thick rails. This creates a relieved, or offset joint. The top edge of the base is rabbeted to form a reveal — or shadow line — between the base and case (see detail 'b' below).

Pocket hole screws join the rails to the corner blocks. You'll use splined miter joints to make the corners. And that's a good place to start.

CORNER BLOCKS. The four corner blocks are identical. The grain runs vertically and a splined miter joint connects the two pieces. I found it easier to bevel the edge of a couple of long blanks then cut the groove for the spline on the blanks.

SPLINED MITERS. The box at the bottom of the opposite page shows how I cut the slot for the splines using a standard blade with a ⅛" kerf. Since the joint won't show, I used a hardboard spline (detail 'c' below). You can cut the corner blocks to final length, then glue up the pairs using the splines. Finally, you can rout the shallow rabbet on the top, outside edge of the blocks.

RAILS. Because pocket hole screws join the rails to the corner blocks, you can simply cut the rails to length. To get the exact length of the rails, I set the corner blocks on the case so that the outside faces were flush with the case. Then it was a simple task to measure between them for the length of the rails. I went ahead and routed the rabbeted reveal on the top edge of the rails before moving on.

Once that's all done, you can fasten the rails to the corner blocks with pocket hole screws, keeping the back faces flush with one another (detail 'd'). A ⅛"-thick spacer helps with clamping and alignment. Now you can add the cleats.

CLEATS. You can see below that the cleats are nothing more than hardwood strips fastened to the inside of the base. The top of the cleat is flush with the top of the base.

The length of the cleats and locations of the screws aren't critical, but the drawings below give you some guidelines. After the cleats are fastened to the base, you can attach the base to the case (detail 'b').

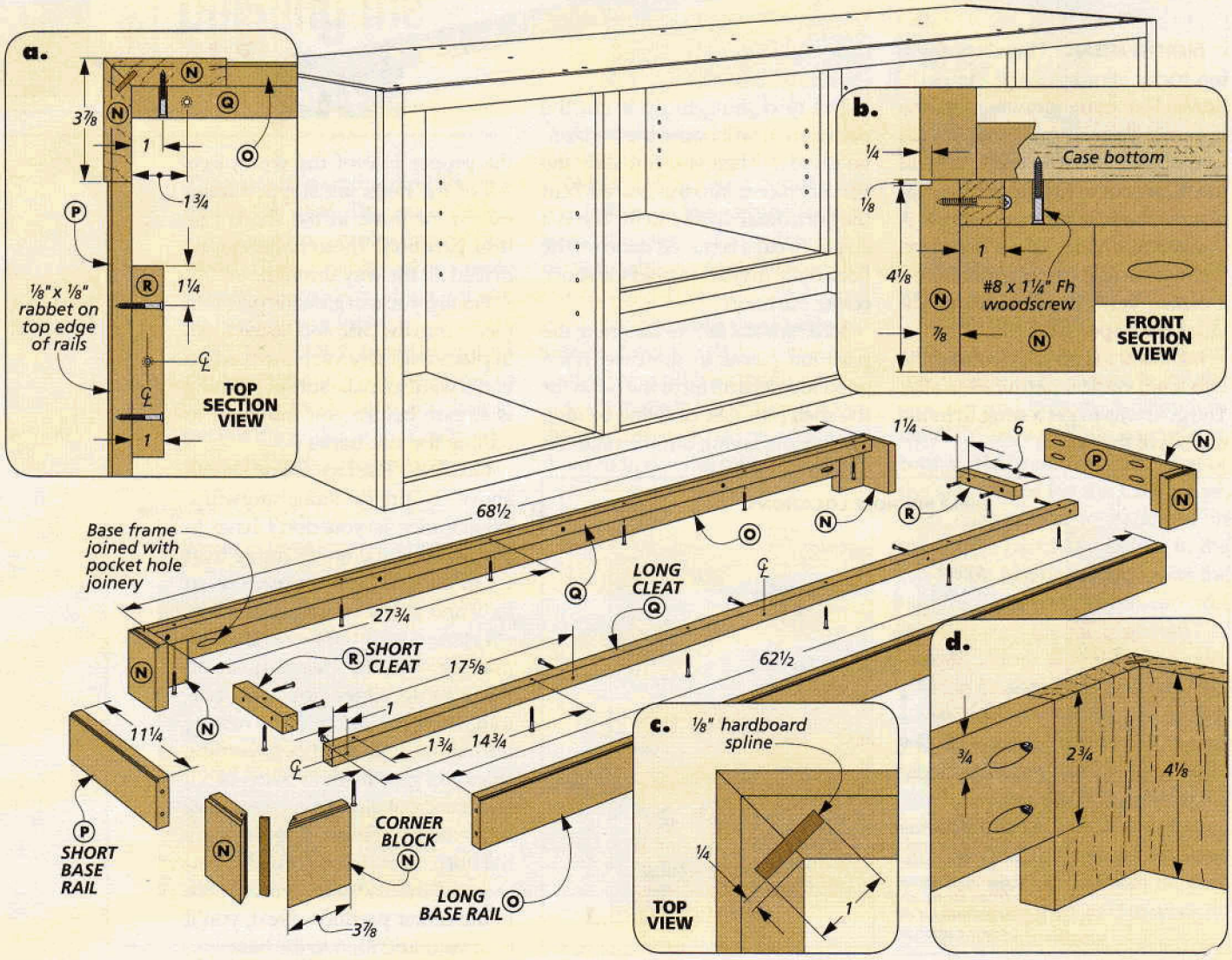

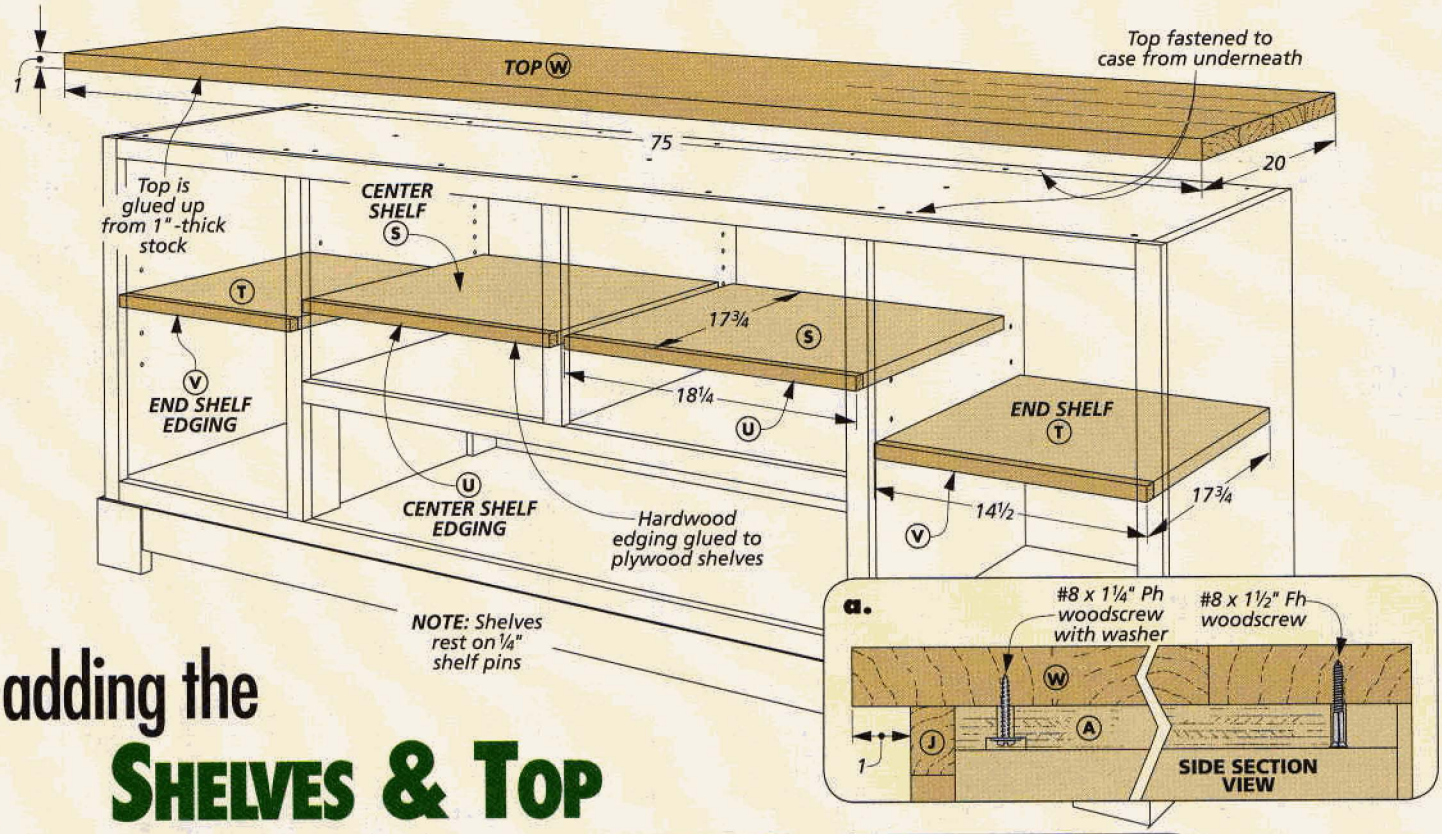

adding the SHELVES & TOP

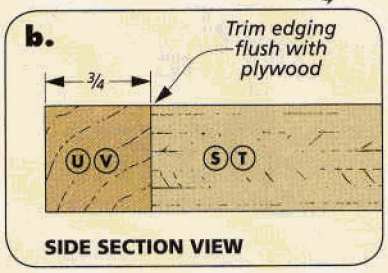

The bulk of the work on the case is done. All you need to do now is add the shelves and the top.

SHELVES. The drawing above shows the four adjustable shelves. They're simple to make. All you need to do is cut some plywood panels to size and glue hardwood edging onto the front edge of each one.

I cut the edging just a little wide to slightly extend past the edges of the plywood. After the glue was dry, I used a hand plane to trim the edging flush to the plywood. You could also use a router with a flush trim bit or a sanding block. Just be careful that you don't sand through the thin veneer of the plywood.

GLUED-UP TOP. Now you're ready to move on to the top. It's glued up from 1"-thick stock. Since it's the "crown" of the project, I took some extra time to sort through the lumber stack to get the best pieces. You're looking for a good color and grain match between the boards. The goal is to make your glue lines as inconspicuous as possible.

SECTION WORK. If you have access to a thickness planer, you can glue up the top in two sections, run each section through the planer, then glue up the two sections. This will help get a flat, smooth top.

Once you've got the entire top glued up, you can work on smoothing it. Careful use of a belt sander can make quick work of flattening it. Then you can follow up with a random orbit sander or sanding block, working your way through finer and finer grits.

TRIMMING. This top is heavy, so it would be awkward to trim the ends square on the table saw. Instead, I used a straightedge with a circular saw, as shown in the box below.

After you've cut the ends square, you can sand them smooth with a sanding block. And while you're at it, you can slightly ease all the edges of the top to soften sharp corners.

ATTACH THE TOP. Now you can fasten the top through the oversized holes in the case. This will allow the top to move with changes in humidity. Next, you'll start on the doors and then add the drawer.

Shop Tips: Splines and Trimming

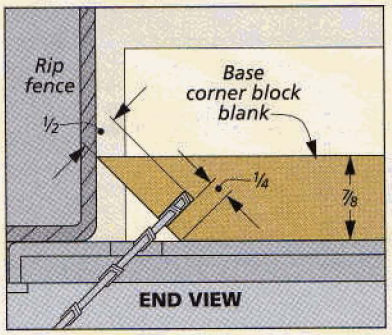

Cutting Spline Slots. *Use the table saw to cut a straight, clean slot for the splined miter joints.*

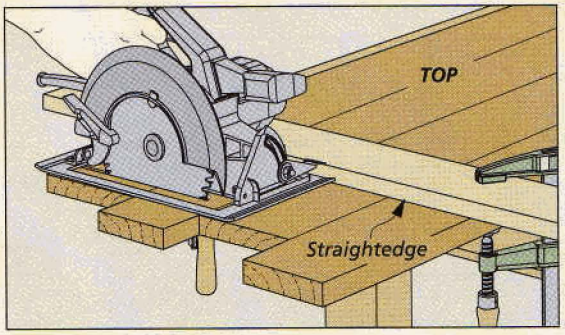

Squaring Up a Top. *To trim the ends of the glued-up top, use a sturdy straightedge and a circular saw with a fine-tooth carbide blade.*

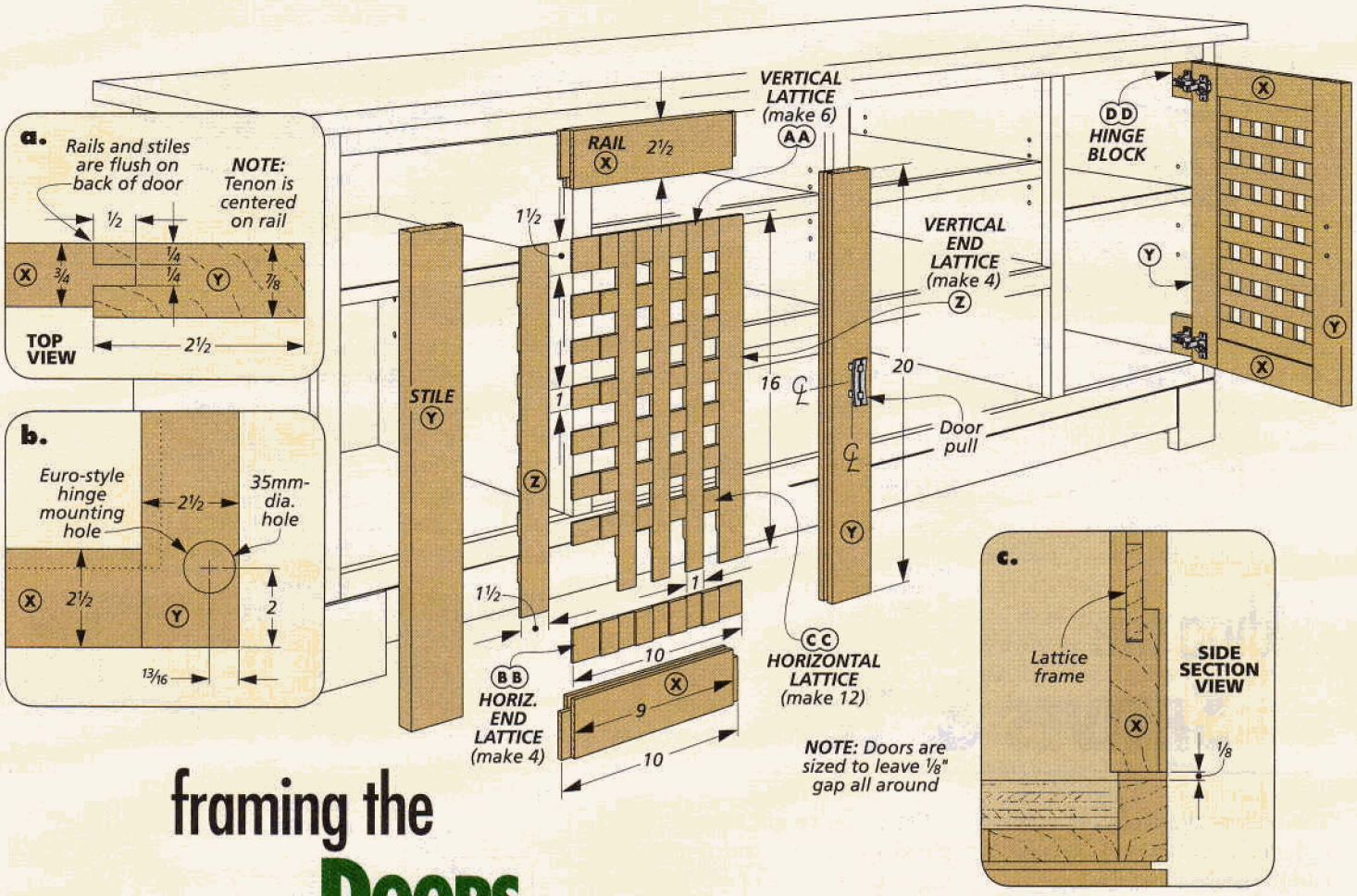

framing the DOORS

Woodsmith GO ONLINE EXTRAS

To learn how to make doors with glass panels, visit our website at Woodsmith.com

The thing that grabs your attention right off the bat on this project is the lattice door panels. The lattice is really a series of half-lap joints in strips of wood that are glued together to form a panel.

This panel fits into a groove in the rails and stiles of the door frame. But before you can work on the lattice panel, you need to make the door frames. They're made up of 7/8"-thick stock for the stiles and 3/4"-thick stock for the rails, as shown in detail 'a' above. And since the joinery is a stub tenon and groove, the groove in the stiles need to be slightly offset from the center.

OFFSET GROOVE. If you look at detail 'a', you'll see what I mean about the offset groove in the stiles. It's not hard to locate this groove if you cut the tenon on the rails first. The box below shows you how I did this with a 1/4" dado blade. It just takes some time to get everything set up right so you can get a snug fit.

Now is a good time to put the pieces for the door frames aside and turn your attention to the lattice panels. You need to have them in hand before gluing up the frames.

LATTICE PANELS. It's not hard to cut all the pieces for the lattice panels. It's a lot of repetitive work, but if you pay attention, it should go smoothly. The box on the next page shows you how I started with wide blanks, cut the notches for the lap joints, then ripped the pieces to width.

GLUING UP THE DOORS. Once the panels are complete, you can insert them in the door frames. But I didn't glue the panels in place. I wanted them to be able to move with changes in humidity. Now you can go ahead and glue up the door frames, making sure they're square.

MOUNTING THE DOORS. Before mounting the doors, you need to add some mounting blocks for the hinges. These hinge blocks need to be flush with the inside edge of the face frame, as shown in the drawing at the top of the opposite page.

How-To: Offset Tenon and Groove

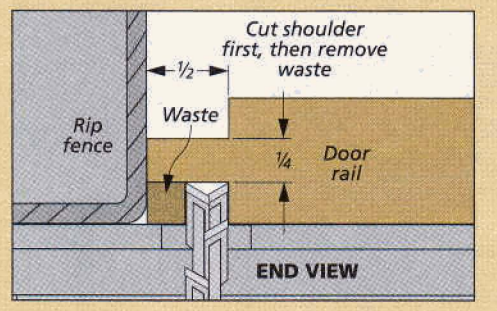

Start with the Tenon. *Use a 1/4"-wide dado blade to form the tenons on the rails. Flip the workpiece to center the tenon.*

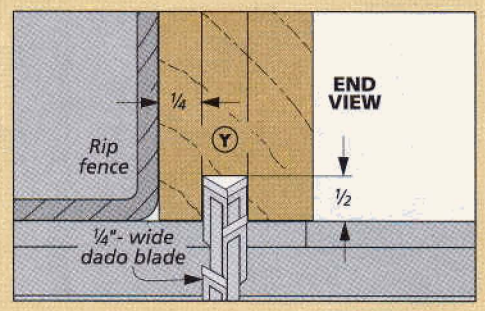

Locate the Groove. *Position the rip fence for cutting the groove in the rails and stiles. The groove in the stiles will be offset.*

Once the hinge blocks are glued in place, you can mount the hinges on the doors and set them in the opening. I used ⅛"-thick spacers to help maintain a consistent reveal all the way around the door.

Next are the door stops. They're just hardwood blocks glued in place behind the face frame. The drawing on the far right shows the location.

All that's left to do now is add the door pulls. Then you can start on the drawer and back panel.

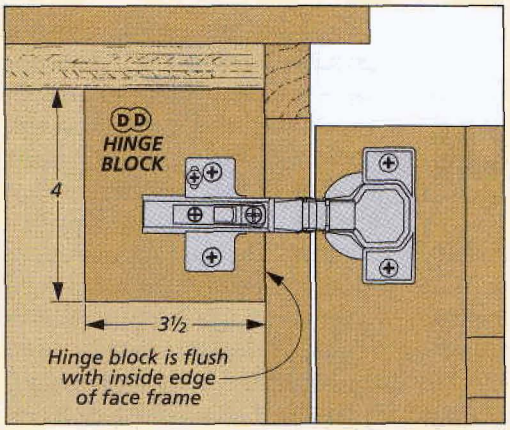

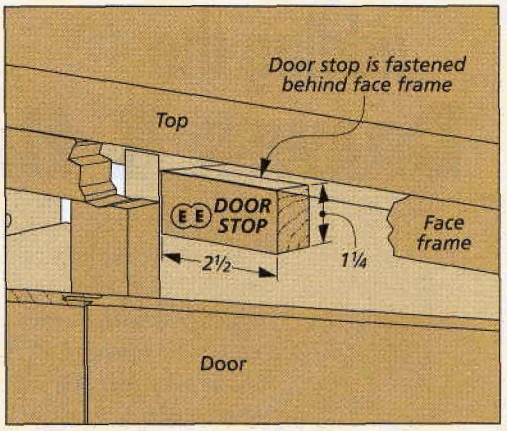

How-To: Making a Lattice Panel

The trick to making all the pieces for the lattice panels is to start with several wide blanks, as shown on the right. This way, you can cut the notches for the lap joints all at once and know they'll all be lined up when you assemble the lattice. Then the strips can be ripped to width to fit the notches.

CUTTING DADOES. To start off, you're really just cutting a series of dadoes in wide blanks. The trick is to lay them out accurately. I found it easier to mark the dado location on the edge of the blank. Then I could align the marks with the dado blade to cut the dadoes in a couple of passes.

SETTING UP THE CUT. I used a ¾" dado blade in my saw to cut all the joints for the lattice. But to get the right blade height, I used a scrap piece that was the same thickness as my blank. I adjusted the blade height to cut to the center of the thickness of the test piece.

START ON THE ENDS. To start things off, I cut the lap joints on the ends of the blanks first, using the rip fence as a guide. Then I flipped the blank end-for-end and made the same cut. Now you can move the fence to line up for the dadoes.

TWO PASSES. Looking at the drawings on the right, you can see how I aligned my layout marks with the dado blade. Then I used a spacer at the end of the blank against the rip fence to "nudge" the piece over to make the second cut. Lastly, you can rip the pieces to width.

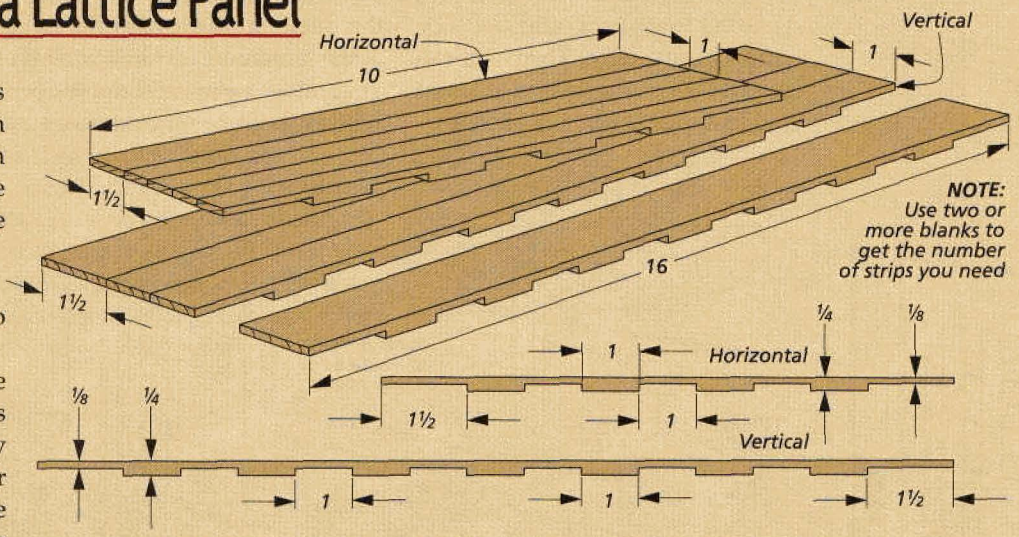

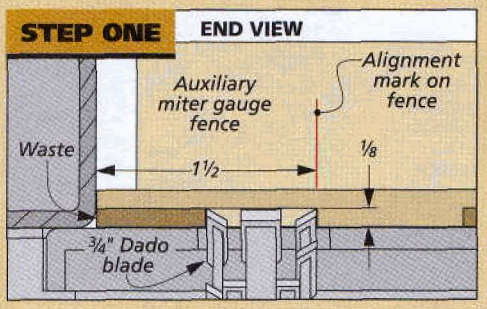

Starting at the Ends. *Use the rip fence as a guide to cut the lap joints on the ends of the blanks with a dado blade.*

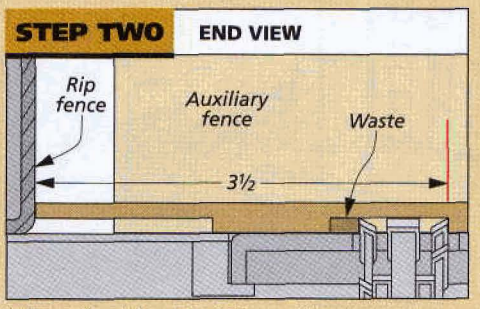

Align for the First Pass. *Use your layout lines to line up the dado blade to make the first pass for cutting the dado.*

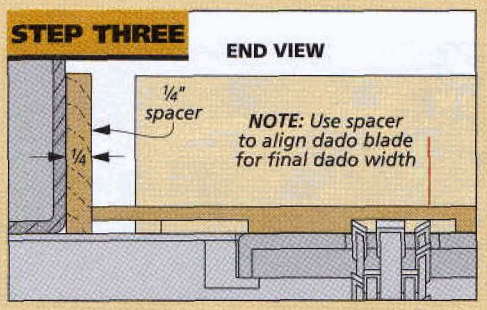

Use a Spacer. *To make the 1"-wide dado, add a ¼" spacer against the rip fence to move the blank over, then make a second pass.*

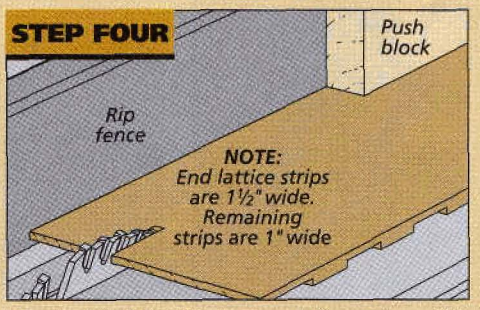

Rip to Width. *Rip the workpieces to width from the blank. Aim for a snug fit in the corresponding pieces that make up the panel.*

adding the DRAWER & BACK

The last two things to do are build the drawer and make the back panel. The drawer fits in the lower, center opening in the case. It's made with simple, rabbeted joints and finished off with a false front. You'll build the drawer first, then install the metal slides.

A SIMPLE BOX. To start on the drawer, I cut the front, back, and two side pieces to final size. Then you can cut a rabbet on the ends of the front and back pieces (drawing below).

The next thing to do is cut a groove on the inside face of all four pieces to hold the drawer bottom. After cutting the ¼" plywood bottom to size, you can glue and screw the drawer box together, making sure that everything stays square.

SPACERS. There's just one more thing you need to do before you can install the metal drawer slides in the case. I couldn't mount the metal drawer slides directly onto the sides of the case because the face frame overhangs the drawer opening.

To get around this problem, I made spacers to fit on the sides of the opening, flush with the edge of the face frame (detail 'd' below). They allow the metal slides to open fully without being obstructed by the face frame. Once the spacers and slides are in place, you're ready to work on the drawer false front.

FALSE FRONT. The false front couldn't be any simpler. It's just a piece of hardwood sized to fit the opening. The only tricky part is getting it sized so that there's an even ⅛" reveal all around. Then it's just a matter of fastening it to the front of the drawer box.

To mount the false front, I first put some carpet tape on the front of the drawer box. Then you can take some time to carefully position the false drawer front in the opening. You'll press firmly until the tape "grabs." Once the false front is in position, fasten it in place with screws from the inside of the drawer.

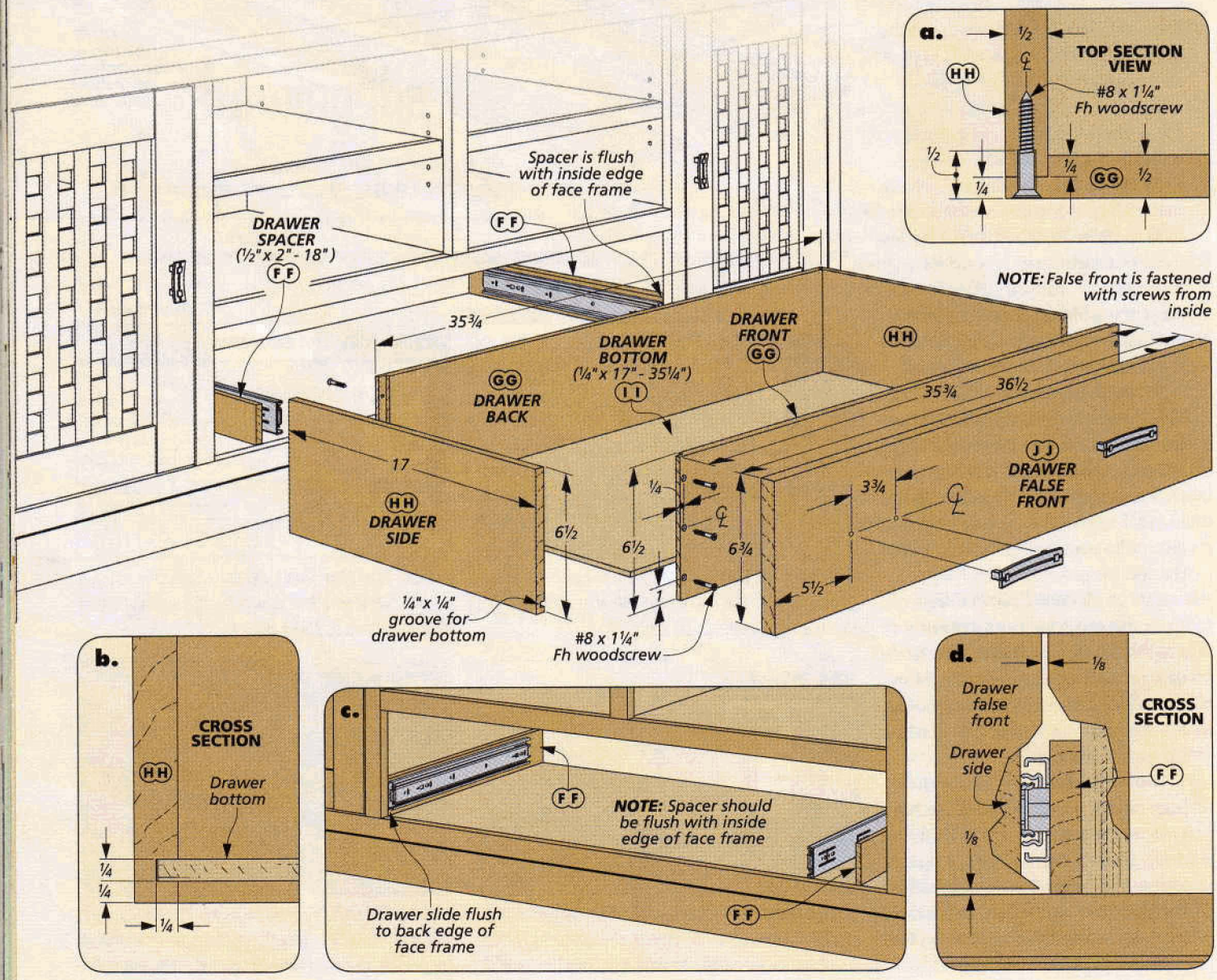

BACK PANEL. The last piece you'll need to add is the back panel. This is made from ¼" plywood.

The openings you see in the drawing at right provide access to all the cables for electronic components. But more importantly, they provide ventilation to prevent heat build-up. Shop Notebook on page 29 shows how I cut clean, smooth openings. Then I mounted the back panel to the case using wire brads around the edge (detail 'a').

After going over the entire project with some sandpaper, you can think about the finish.

FINISHING UP. I decided to use a "two-tone" finish for this project. I chose a dark stain for the top and base. A natural tung oil finish on the case contrasts with the dark stain and adds a nice, warm tone.

To make the task of applying the stain easier, I removed the top and base from the case before applying the stain to those pieces. The case, shelves, and drawer front were rubbed with a couple coats of tung oil. Then you can reassemble everything and apply a clear lacquer finish for a layer of protection.

Finally, you can move the cabinet into your favorite room to show it off to friends and family. After you install the shelves and all your electronic equipment, just sit back, relax, and enjoy the show. W

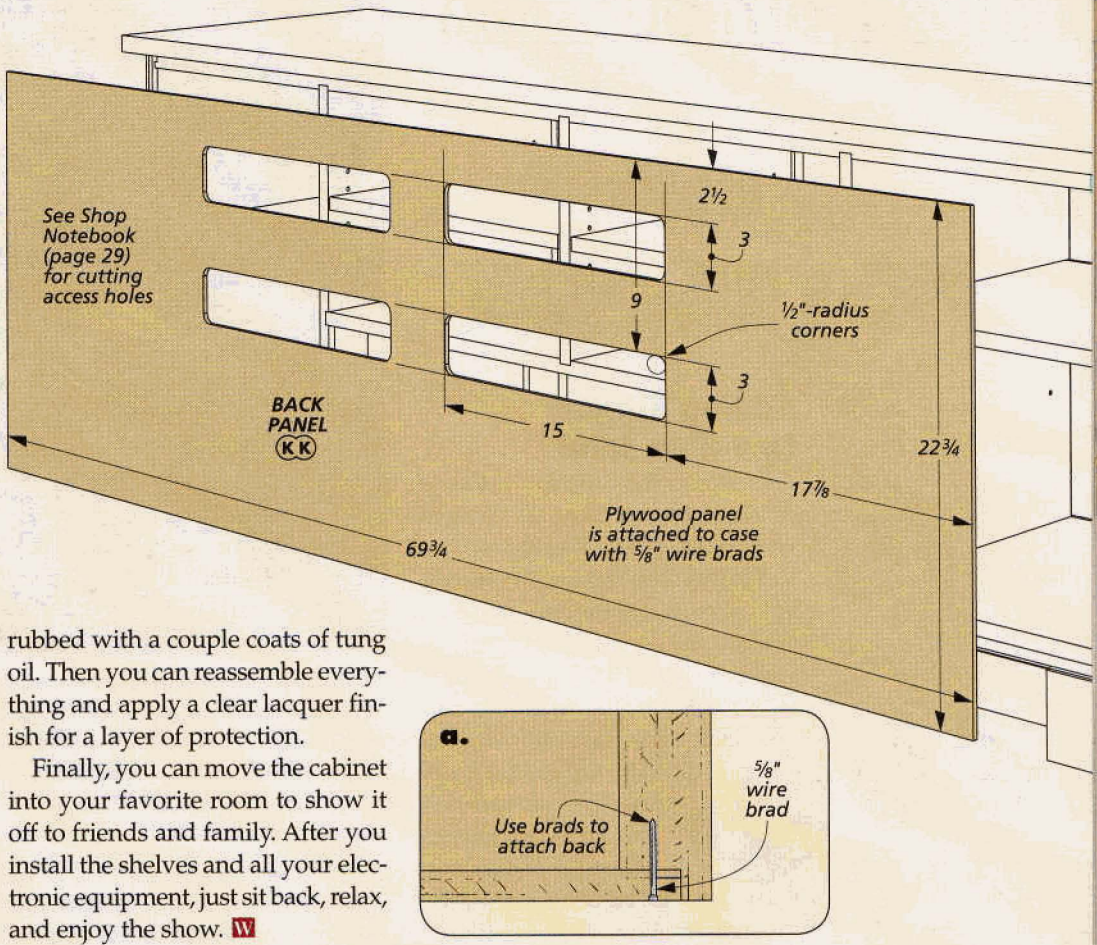

Materials, Supplies & Cutting Diagram

A	Case Top (1)	¾ ply. - 18 x 69¼
B	Case Bottom (1)	¾ ply. - 18 x 69¼
C	Case Sides (2)	¾ ply. - 18¼ x 22¾
D	Vert. Partitions (2)	¾ ply. - 18 x 21¼
E	Center Partition (1)	¾ ply. - 18 x 13
F	Hor. Divider (1)	¾ ply. - 18 x 38¼
G	Long Filler Strips (2)	½ x 2 - 68¾
H	Short Filler Strips (2)	½ x 2 - 14
I	End Face Frames (2)	¾ x 1¼ - 22¾
J	Top/Bot. Face Fra. (2)	¾ x 1¼ - 67¾
K	Ver. Face Frames (2)	¾ x 1¼ - 20¼
L	Hor. Face Frame (1)	¾ x 1¼ - 36¾
M	Center Face Frame (1)	¾ x 1¼ - 12
N	Corner Block (8)	⅞ x 3⅞ - 4⅛
O	Long Base Rails (2)	¾ x 2¾ - 62½
P	Short Base Rails (2)	¾ x 2¾ - 11¼
Q	Long Cleats (2)	1 x 1 - 68½
R	Short Cleats (2)	1 x 1 - 6
S	Center Shelves (2)	¾ ply. - 17 x 18¼
T	End Shelves (2)	¾ ply. - 17 x 14½
U	Center Shelf Edging (2)	¾ x ¾ - 18¼
V	End Shelf Edging (2)	¾ x ¾ - 14½
W	Top (1)	1 x 20 - 75
X	Door Rails (4)	¾ x 2½ - 10
Y	Door Stiles (4)	⅞ x 2½ - 20
Z	Vertical End Lattice (4)	¼ x 1½ - 16
AA	Vertical Lattice (6)	¼ x 1 - 16
BB	Horizontal End Lattice (4)	¼ x 1½ - 10
CC	Horizontal Lattice (12)	¼ x 1 - 10
DD	Hinge Blocks (4)	½ x 3½ - 4
EE	Door Stops (2)	¾ x 1¼ - 2½
FF	Drawer Spacers (2)	½ x 2 - 18
GG	Drw. Front/Back (2)	½ x 6½ - 35¾
HH	Drawer Sides (2)	½ x 6½ - 17
II	Drawer Bottom (1)	¼ ply. - 17 x 35¼
JJ	False Front (1)	¾ x 6¾ - 36½
KK	Back Panel (1)	¼ ply. - 20 x 75

- (2) 32mm Door Pulls
- (2) 96mm Drawer Pulls
- (1 pr.) 16" Full-Ext. Drawer Slides
- (2 pr.) Full Inset Hinges
- (16) ¼" Nickel Shelf Support Pins
- (16) #7 x 1¼" Pocket Hole Screws
- (6) #8 x 1¼" Fh Woodscrews
- (34) #8 x 1½" Fh Woodscrews
- (18) #8 x 2" Fh Woodscrews
- (1 pkg.) ⅝" Wire Brads

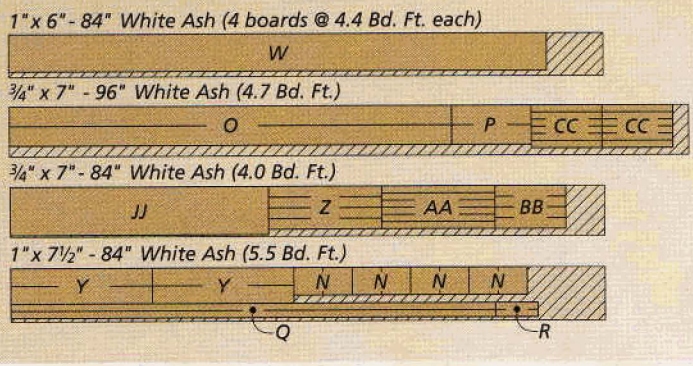

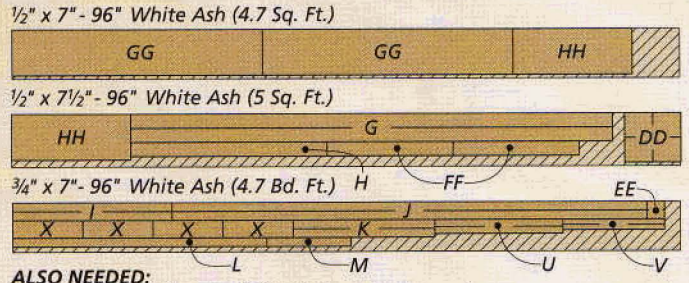

ALSO NEEDED:
Two - 48" x 96" Sheets of ¾" White Ash plywood
One - 48" x 96" Sheet of ¼" White Ash plywood

SHOP NOTEBOOK

Adding Hinges to a Rule Joint

The door of the drop-front storage center project on page 12 is hinged with a rule joint (also called a drop-leaf joint). This allows the hinges to be completely hidden inside the case and the door to rest flat without any extra support when opened.

▲ The hinges used on a rule joint have a short leaf and a long leaf. This allows the hinge to bridge the joint.

TWO MORTISES. To make the rule joint work smoothly without binding, the special drop-leaf hinges (margin photo) have to be installed properly.

As you can see in the photo above, the hinge barrel isn't centered over the joint line. It sits back from the edge of the case bottom and is mortised in along with the short hinge leaf. The long hinge leaf extends across the joint line. What this means is that you'll need to cut shallow mortises for the hinge leaves and then a deeper mortise (or pocket) for the barrel.

CAREFUL LAYOUT. The first step is to lay out the mortises for the hinge leaves, as in Figure 1. Start by marking the side-to-side position of the hinges on the case bottom. Then measure back 3/8" from the edge and mark a line locating the center of the hinge barrel.

Next, slide the case bottom and door together with a couple of playing cards between them as spacers. Lay the hinge in position (barrel up) on the layout marks and use it to mark the outline of the mortises in the case bottom and door. Just make sure the barrel of the hinge is centered over the layout line.

THE LEAF MORTISES. With the layout complete, I got out my router and installed a straight bit. This allows you to quickly rout away the bulk of the waste from the shallow mortises. You'll get a consistent depth and a flat bottom. Finish the mortises by using a chisel to clean up around the edges (Figure 2).

THE BARREL MORTISE. Now, you need to cut a pocket for the hinge barrel (Figure 3). This won't show, so a perfect fit isn't necessary. You can get the job done quickly with a pair of chisels. Again, just make sure the pocket is positioned accurately, as shown in Figure 3a.

ASSEMBLE THE JOINT. Once the pockets are cut, you can fit the hinges into the mortises and assemble the joint. A self-centering bit makes drilling the pilot holes easy (Figure 4). Then simply install the screws.

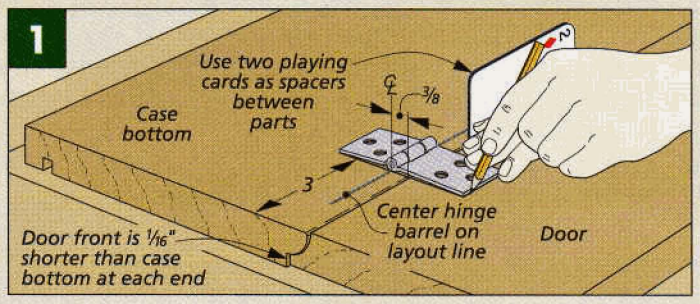

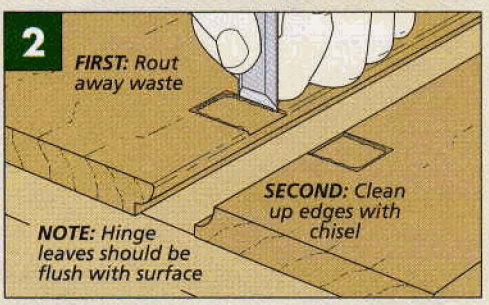

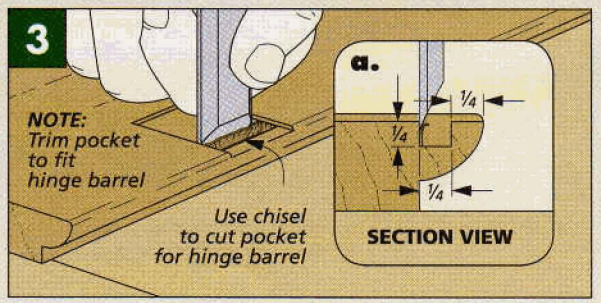

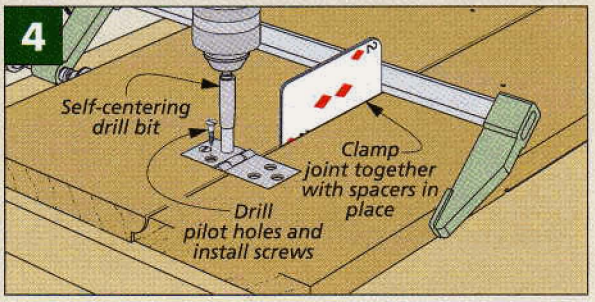

Tip-Out Drawers

When I built the campaign chest on page 30, I attached small blocks to the underside of the case top and the web frames to act as drawer catches. These catches do double-duty by stopping the drawer as it's pushed into the case *and* keeping it from accidently being pulled out of the case and spilling the contents.

This works well, but presents a small challenge. Detail 'a' at right shows how the catch stops the drawer when opened. But to remove (or insert) the drawer, the back has to clear the catch.

The main drawing above shows the simple solution to the problem. All you have to do is cut a short bevel on the lower back edge of the drawer sides. This allows you to tip the drawer up and slide the drawer back beneath the catch. It's easy to do and works well.

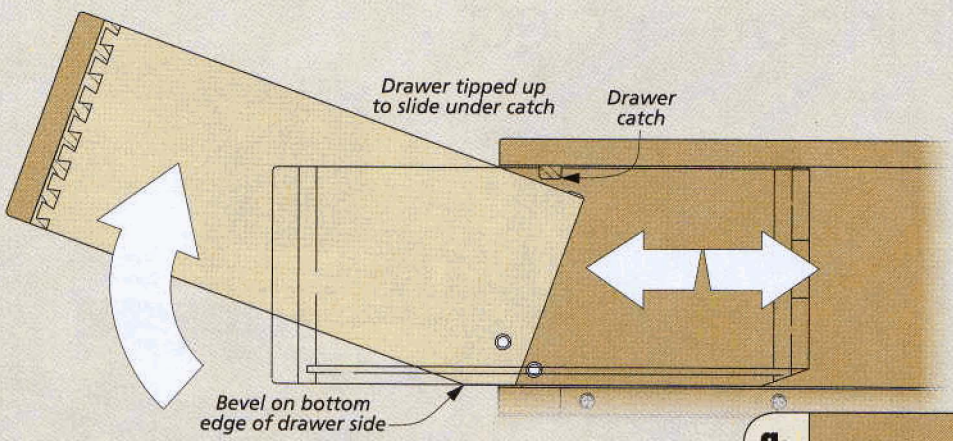

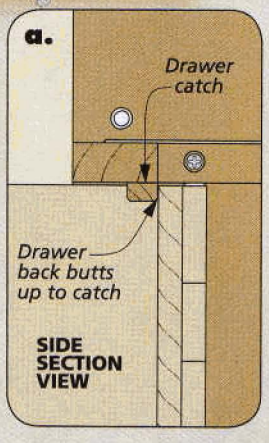

SAW, THEN PLANE. You'll want to wait until after the drawers have been assembled to cut the bevels on the sides. This way, you can easily test fit them to the case and know for certain the bevel is right.

The drawings at left show the simple process. First, I laid out the bevel cut on each drawer side. Then I used a back saw to cut away the waste, staying to the outside of my layout line, as shown in Figure 1. Finally, I turned the drawer "bottom up" to smooth the saw marks and fine-tune the fit with a block plane (Figure 2).

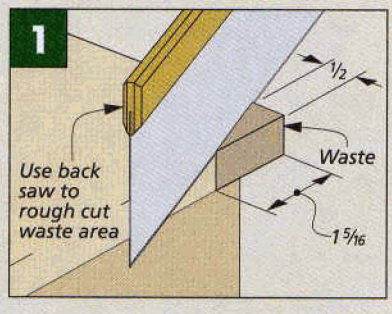

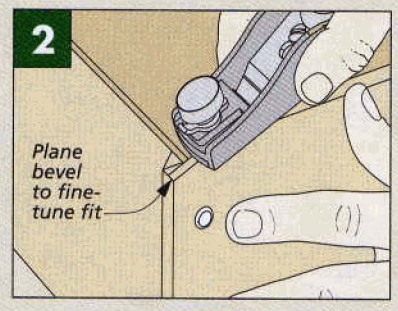

Crisp, Clean Cutouts

The back of the TV cabinet project on page 18 needs a cluster of four cutouts to provide cable access and ventilation. The drawings at right show how you can make clean, accurate cutouts without spending too much time and effort.

LAYOUT AND CORNERS. The first step is to lay out the four cutouts on the inside of the back panel, as shown in Figure 1. Next, I formed the rounded corners by using the layout to drill 1"-dia. holes with a Forstner bit (Figure 2). You'll want to back up the panel to avoid splintering when you drill the holes.

ROUGH CUT AND SMOOTH. The corner holes now allow you to use a jig saw to rough cut the openings. Stay about ¼" to the inside of the layout lines (Figure 3).

Finally, to smooth the openings, I installed a pattern bit in my router. As shown in Figure 4, a straightedge attached to the panel with carpet tape allows you to rout a clean edge between the corner holes. W

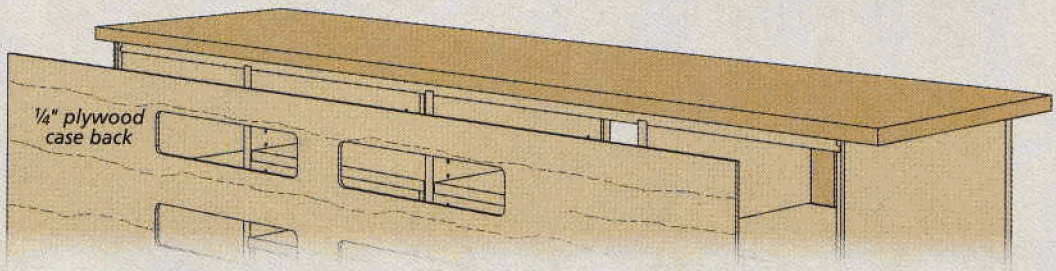

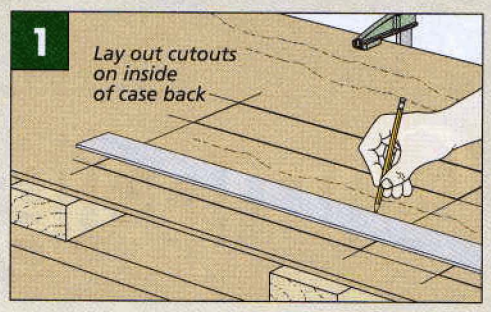

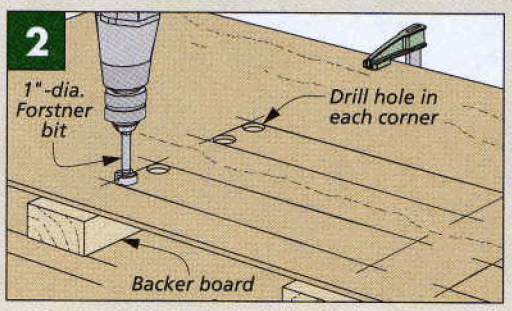

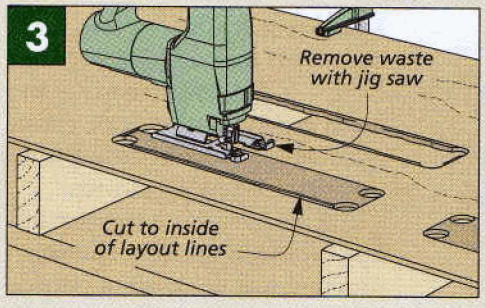

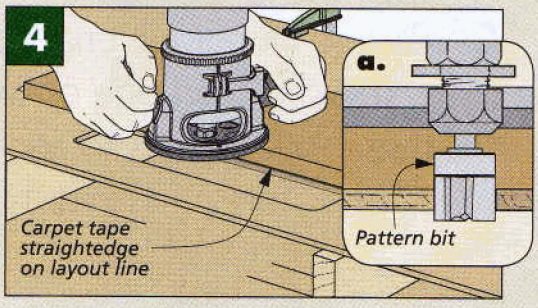

dovetailed Campaign Chest

Packed with traditional details, you can build one or two of these small chests to add style and storage to your home.

From a woodworker's perspective, this project has a little bit of everything — dovetails, mortise and tenon joinery, veneer work, classic molding, and period hardware. All this makes it a nice challenge.

There's also some interesting history behind this project. Campaign furniture was designed to provide 19th-century military officers with rugged, versatile storage that could be packed up and moved easily.

Although you probably aren't on the move, no doubt your house could use more storage. And you'll find that the solid construction and eye-catching details of this project make it ideal for homes today.

CONSTRUCTION DETAILS

OVERALL DIMENSIONS:
24"W x 16"D x 24⅜"H

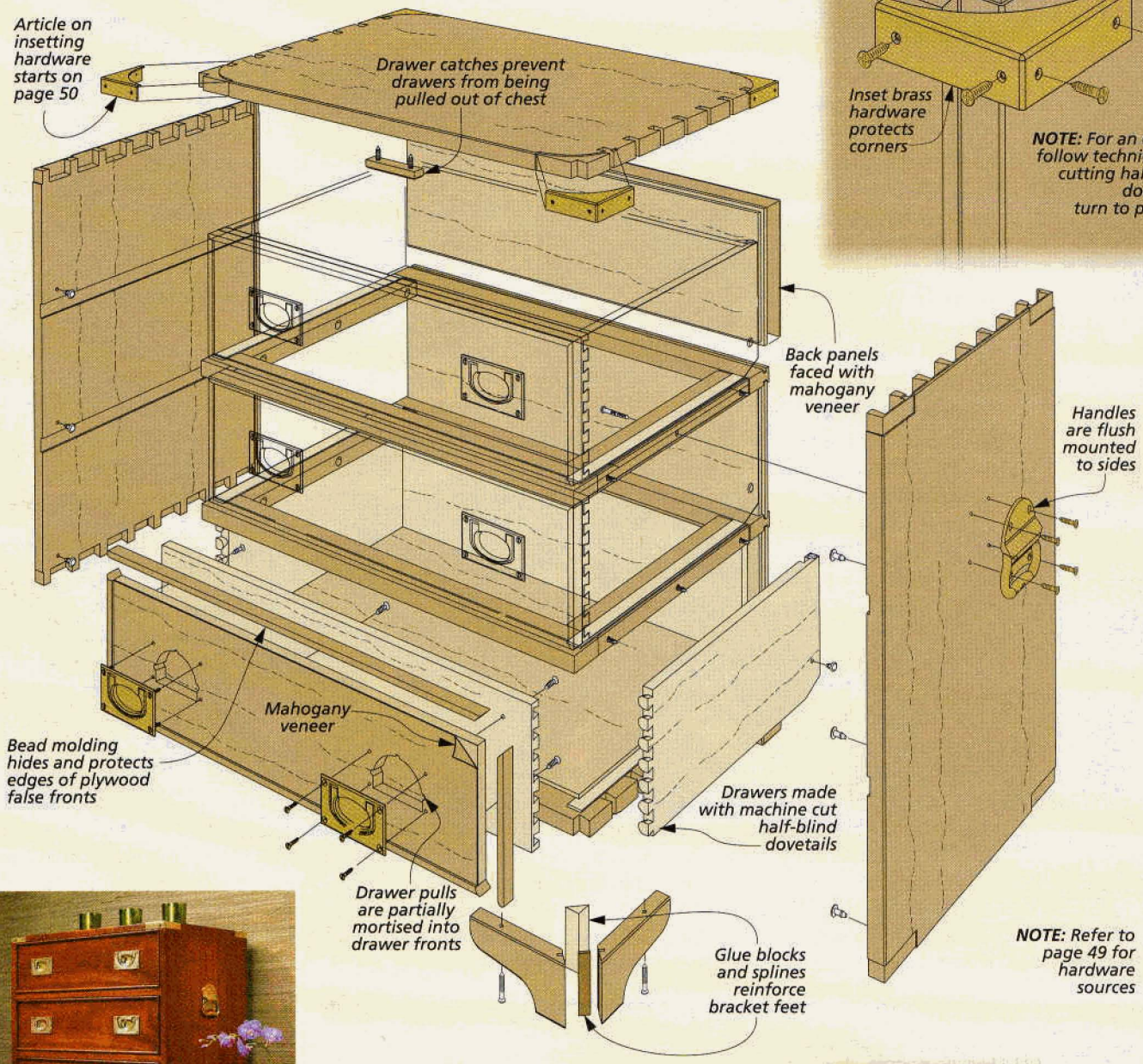

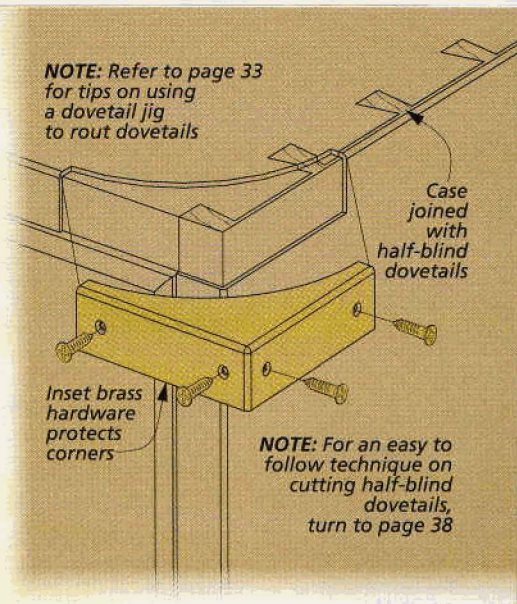

▲ Double the storage without taking up any more floor space by stacking a second chest on top.

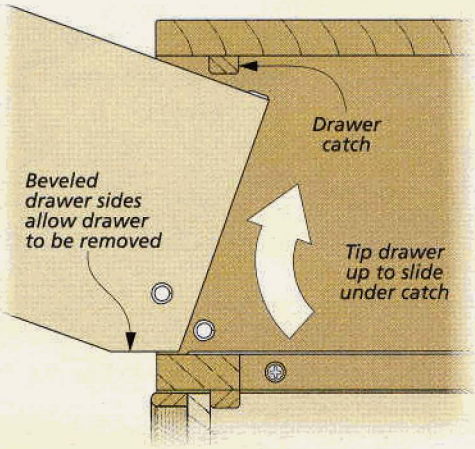

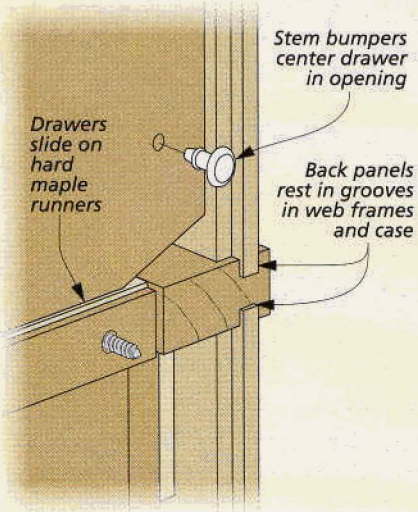

a dovetailed CASE

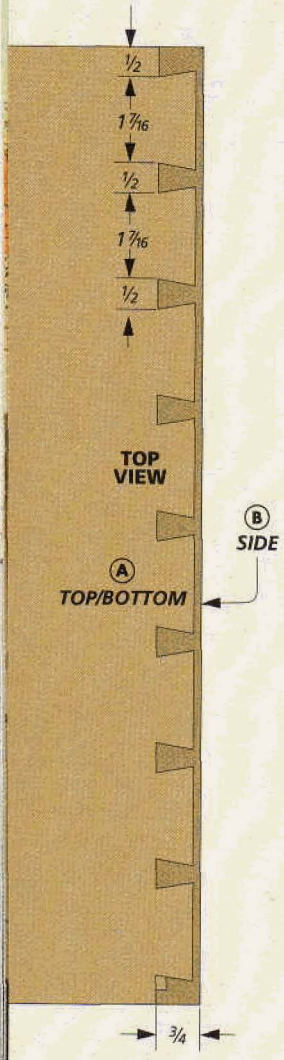

Building the campaign chest breaks down nicely into three, easily managed sections: the case, the web frames, and the drawers. The case starts out as an open, dovetailed box with a few dadoes and grooves, as in you can see in the drawing at right.

HALF-BLIND DOVETAILS. The half-blind dovetails I used to join the case parts have two big advantages. The first is that it's a very sturdy joint. The dovetails pull the two parts together, and you almost don't need glue.

The other advantage lies in how this joint looks. Exposed half-blind dovetails stand out and give an otherwise simple case real visual appeal.

To get started on building the case, I sized the top, bottom, and sides to the dimensions shown in the drawing. The next step is to cut the half-blind dovetail joints.

JOINERY. You have a couple of options when it comes to making the dovetails. I used an adjustable dovetail jig. For some tips on getting the best results, take a look at the short article on the facing page.

You can also make the dovetails without a jig — it's not as difficult as it sounds. If you turn to page 38, you'll find a step-by-step technique to guide you through the process.

Don't be in a hurry to assemble the case after cutting the dovetails. There are still a few details you'll need to take care of.

DADOES AND GROOVES. First, I cut some dadoes into the case sides that will capture the web frames, as illustrated in detail 'a' above. In the box at left, you'll see a way to quickly cut these on the table saw.

While you're at the table saw, you can cut a groove near the back of all the parts. This 1/4"-wide groove will capture the back panels, as illustrated in detail 'b' at left.

The last thing to do on the case sides is to drill a few holes for some nylon stem bumpers that will be added later to guide the drawers.

For now, you can set the case pieces aside and make the drawer frames and back. To see how it's done, simply turn the page.

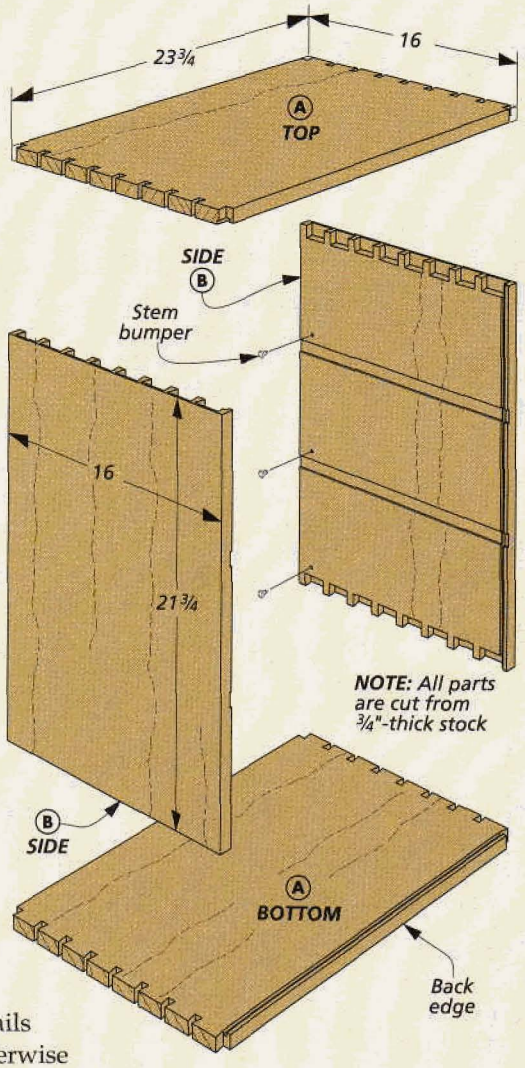

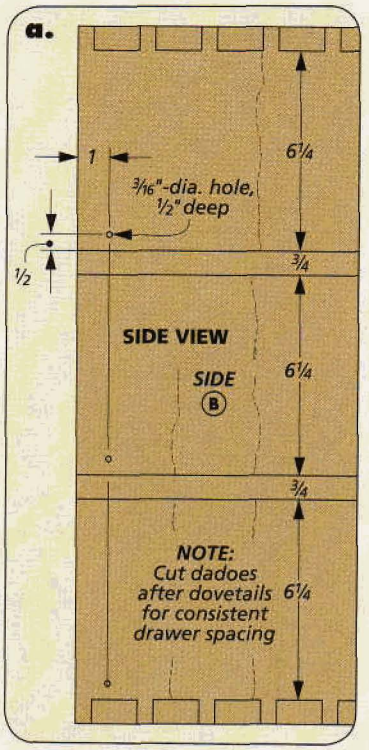

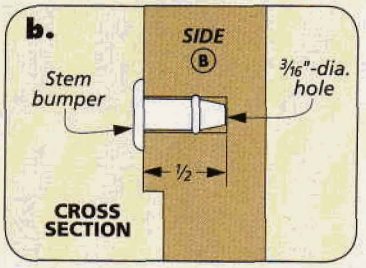

How-To: Cut Dadoes

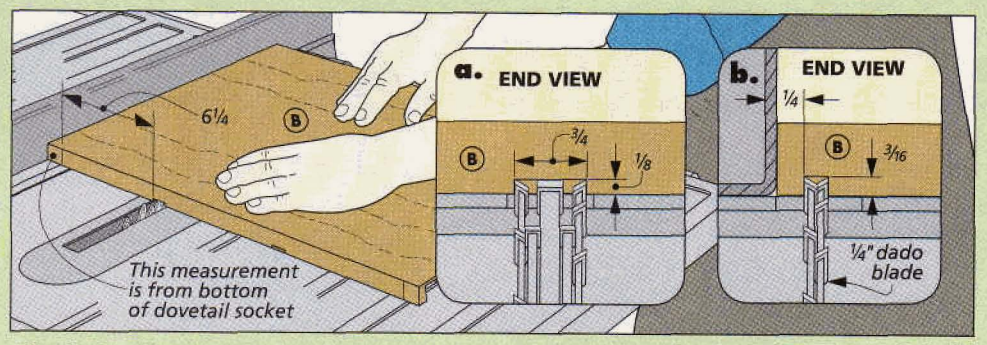

Single Setup. *Since the dadoes are evenly spaced on the case sides, you can cut them without having to change the fence setting. All you have to do is make one cut then flip the board end for end and make the second pass. Then cut the groove for the back.*

routing the DOVETAILS

Using an adjustable dovetail jig (like the *Leigh* jig) to rout the half-blind dovetails in the case is a quick way to get tight-fitting joints. But if it's been awhile since you last used it, you may need a refresher course. So here are a few pointers to help you along the way.

First of all, unlike some jigs, the tails and pins are routed separately. So you'll need to label the pieces carefully. Along with that, routing each part uses a different side of the template (photos below).

The next thing to do is get the bit and guide bushing set up in your router. For the *Leigh* jig, the owner's manual specifies an exact bit and guide bushing combination to use for ¾"-thick stock (a 10° dovetail bit and a 7/16" O.D. guide bushing).

TAILS FIRST. It's a good idea to do a few test cuts on some scrap pieces that are the same thickness as the actual parts. This way, you can dial in the settings without wasting wood. I set up to rout the tails first, as you can see in the left photo below.

A gauge on the template shows you where to locate it in relation to the workpiece. I then cut some filler strips to fit between the fingers on the template to keep the bit from routing in the wrong place. Finally, I clamped a backer board behind the workpiece to prevent tearout.

PINS. Once the tails have been routed, you can turn your attention to the pins. The pin board is clamped horizontally in the jig, as in the right photo below.

Then the template is flipped over to guide the bit when routing the pins. To make sure the pin board is located in the right spot, I clamped an index board vertically in the jig. After routing the pins, you can check the fit of the joint. The box below will give you some advice on how to correct any problems.

▲ You'll need a 7/16" guide bushing and a 10° dovetail bit.

▲ Here's how the jig looks set up for routing the tails. I clamped a backer board behind the workpiece to prevent tearout. Wood spacers between the fingers guide the bit.

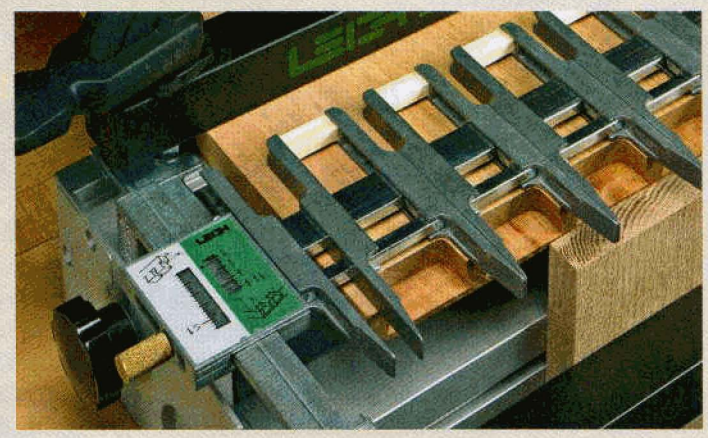

▲ To rout the pins, flip the template over and use the green thickness gauge to set the pin length. The board clamped in front is used as a gauge to position the pin board.

Troubleshooting: Tips for Getting a Perfect Fit

If after routing a test set of dovetails you aren't happy with the fit, you'll need to tweak the settings on the jig and router. However, knowing just what to do can be a bit confusing. But don't worry.

In the drawings at right, you'll find a few of the most common troubles. Don't try to fix everything at once. As you make adjustments, it's best to make a small change to one setting and make another test cut. Then move on once you have that just right.

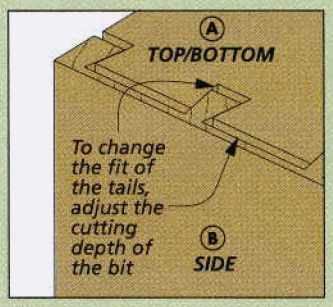

The Right Bit Depth. *If the dovetails are too loose, increase the depth of cut on the router. If the joints are too tight, decrease the bit depth.*

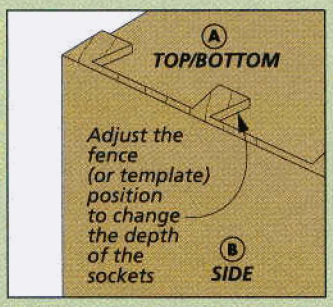

Adjust the Template. *If the tail board sits too deep, move the template forward. If the tails are proud, move the template back a bit.*

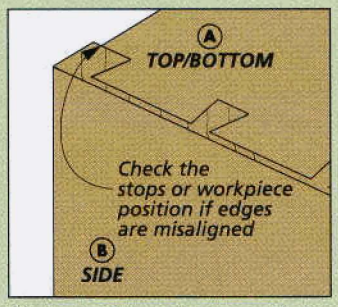

Fixing Offset Edges. *If the top and side edges don't align, the workpieces may not have been clamped tight against the stops on the jig.*

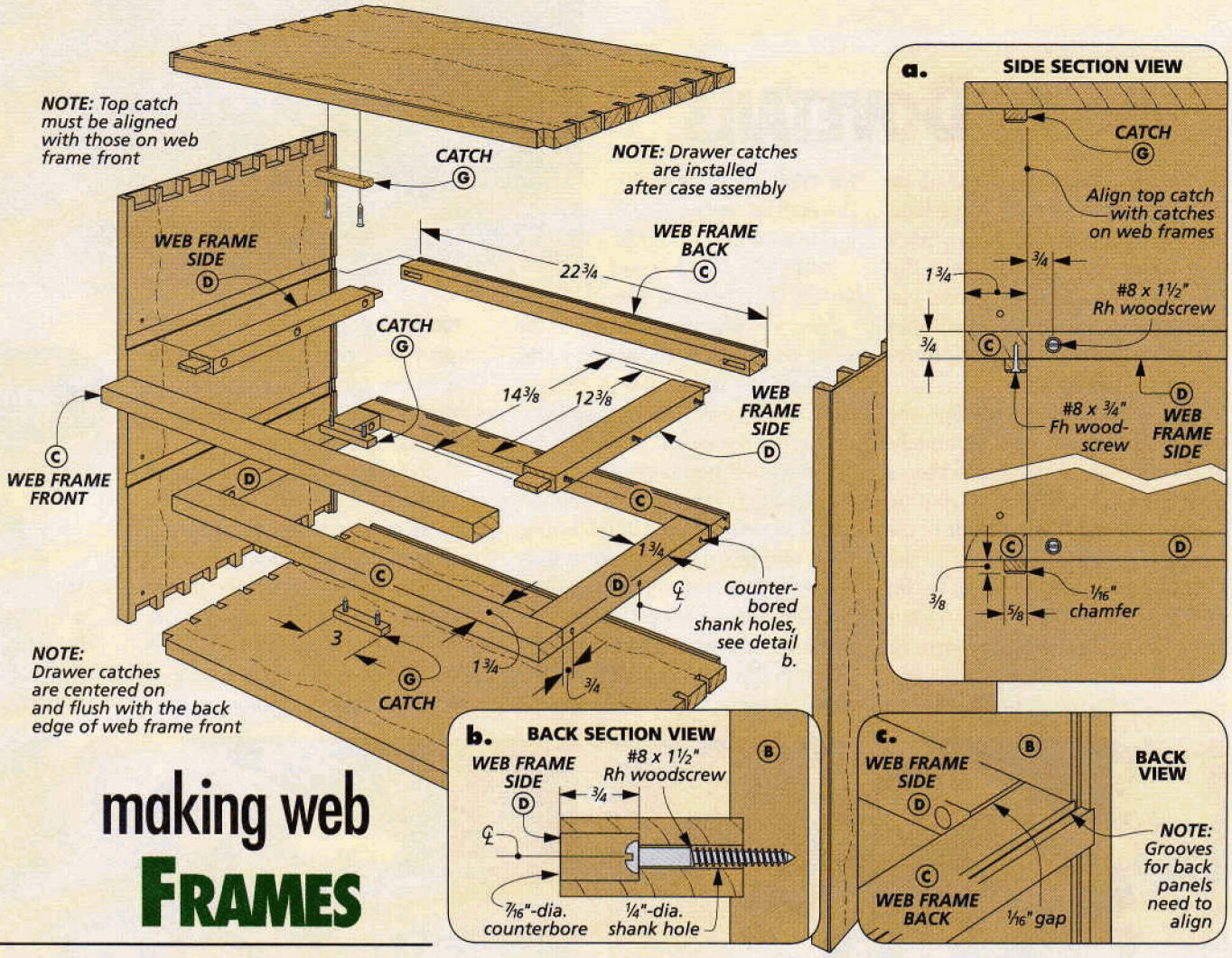

making web FRAMES

After completing work on the "outside" parts of the case, the task now is to build the "insides." This includes the web frames and the paneled back assembly.

I began with the web frames. Actually, these frames will do more than support the drawers. They will also capture the back panels. To make the frames, start by cutting the parts to size.

MORTISE AND TENON JOINERY. You can see in the drawing above that the web frames are assembled with mortise and tenon joints. The box below shows you the steps involved in making the joints. I cut mortises in the fronts and backs by drilling out the waste and squaring up the mortises with a chisel.

Matching tenons are then cut on the frame sides at the table saw. I also drilled some counterbored holes in the frame sides that will be

How-To: Cut the Web Frame Joinery

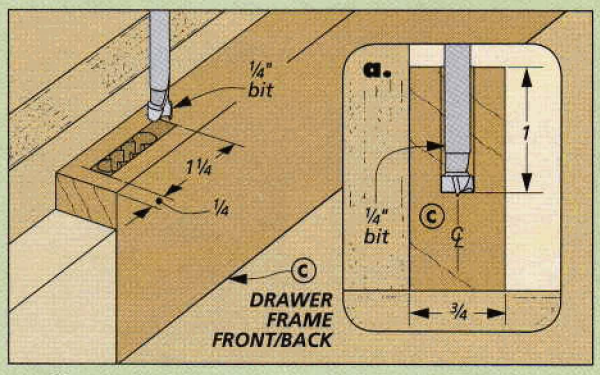

Making Mortises. *Rough out the waste on the mortises at the drill press. Use a stop block to keep each one consistent. Then clean up the edges with a chisel.*

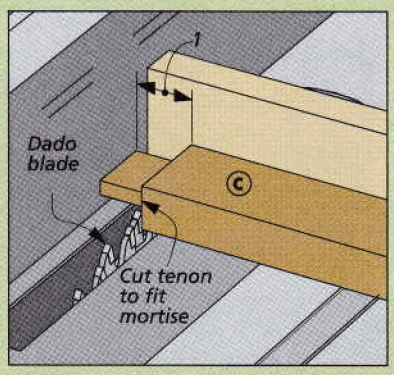

Now, the Tenons. *Cut the tenons on the table saw. Start with an oversize tenon and work up to a snug fit.*

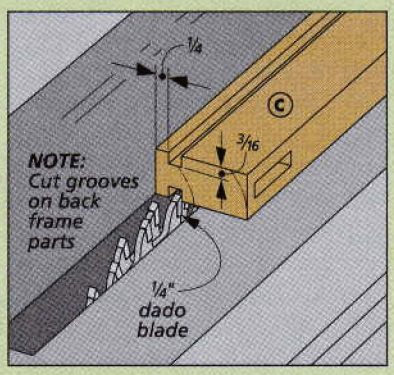

The Grooves. *Before assembling the frames, cut grooves in the web frame back to hold the back panels.*

used to screw the web frames to the case later on, as you can see in detail 'b' on the opposite page. These holes provide a strong mechanical connection to the case sides and still allow for wood movement.

GROOVES. Before assembling the frames, I cut a narrow (¼"-wide) groove in the top and bottom of both frame backs. These grooves, like the ones in the case pieces, will be used to hold the plywood back panels you'll make next.

Now you're ready to assemble the frames. I glued the frames together at the front, but not the back. Since the case is solid wood, the backs of the web frames need to float freely. This way, the grooves stay aligned with those in the case as the sides expand and contract with seasonal changes in humidity. You can see this in detail 'c' on the facing page.

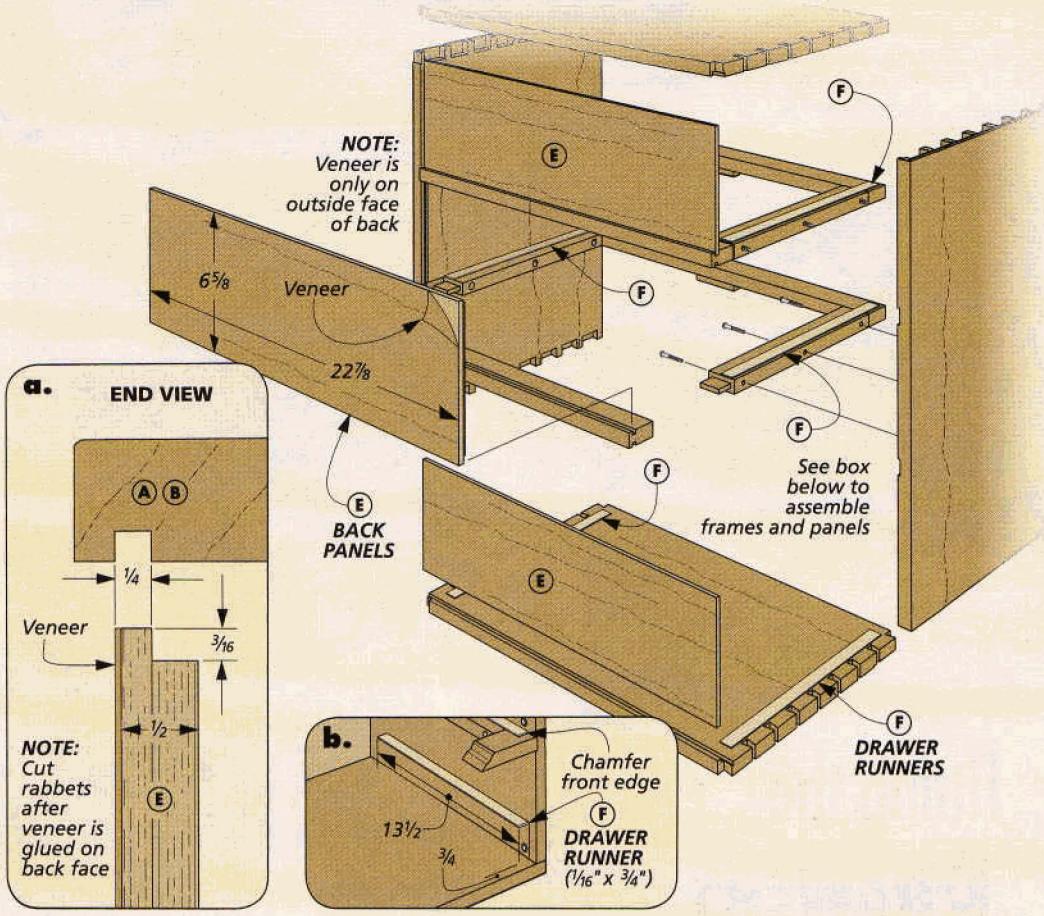

BACK PANELS

The last parts to make before you can assemble the case are the back panels. To avoid expansion and contraction issues, I made these from plywood. However, finding good-looking ½" mahogany plywood can be a challenge.

CUSTOM PLYWOOD. The solution to this problem was simple — I "made" my own, as in the drawing above. I started with oversize ½" Baltic birch plywood blanks. Then I applied a piece of straight-grained mahogany veneer to one side of each of the panel blanks. To find veneer sources, turn to page 49.

RABBET TO FIT. The next step is to cut the panels to final size and cut a rabbet on all the edges to create a tongue. The thickness of the tongue is sized to match the grooves in the case and web frames (detail 'a').

CASE ASSEMBLY. At this point, you're ready for assembly. And here, you really need to do things all at once (and in the right order). The box below shows you how I did it. Before applying any glue, however, it's a good idea to do a dry run. This way, you can make sure everything fits well and there aren't any gaps.

DRAWER RUNNERS AND CATCHES. Once the case is assembled, you can attach some drawer runners to the web frames and case bottom (detail 'b' above). Finally, you can make and install the drawer catches on the case top and the underside of both web frames, as in the drawing and detail 'a' on the opposite page.

How-To: Assemble the Case

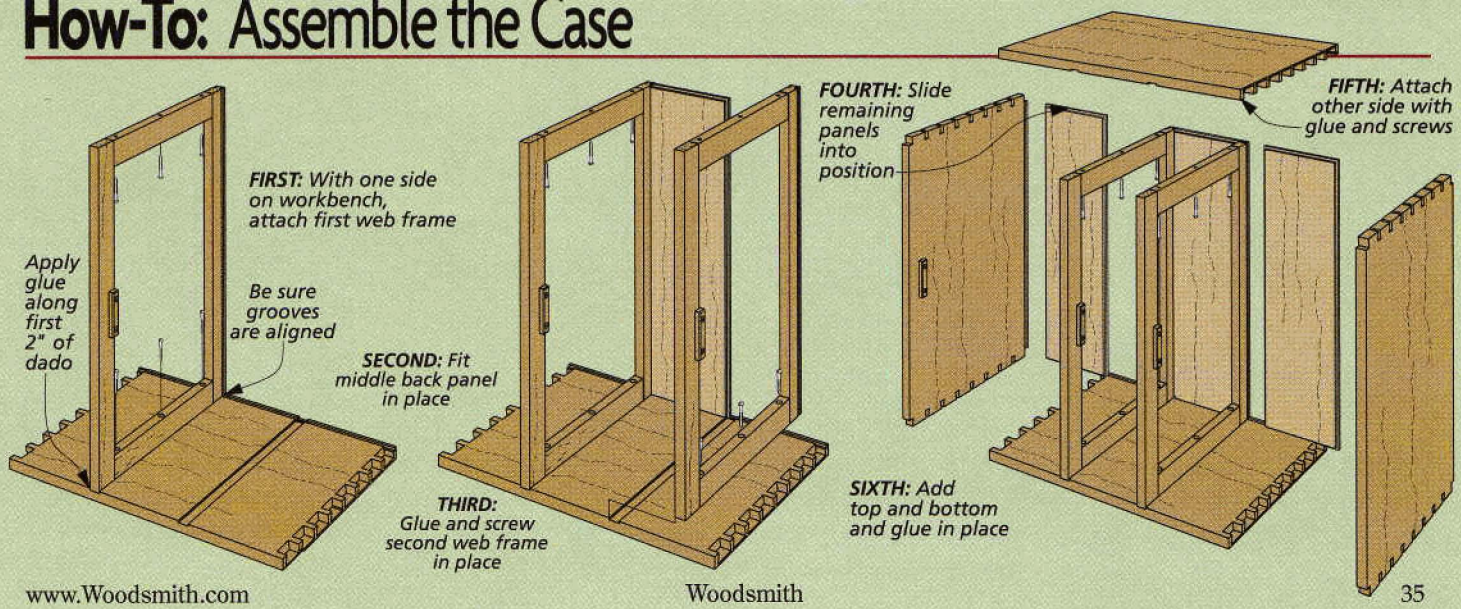

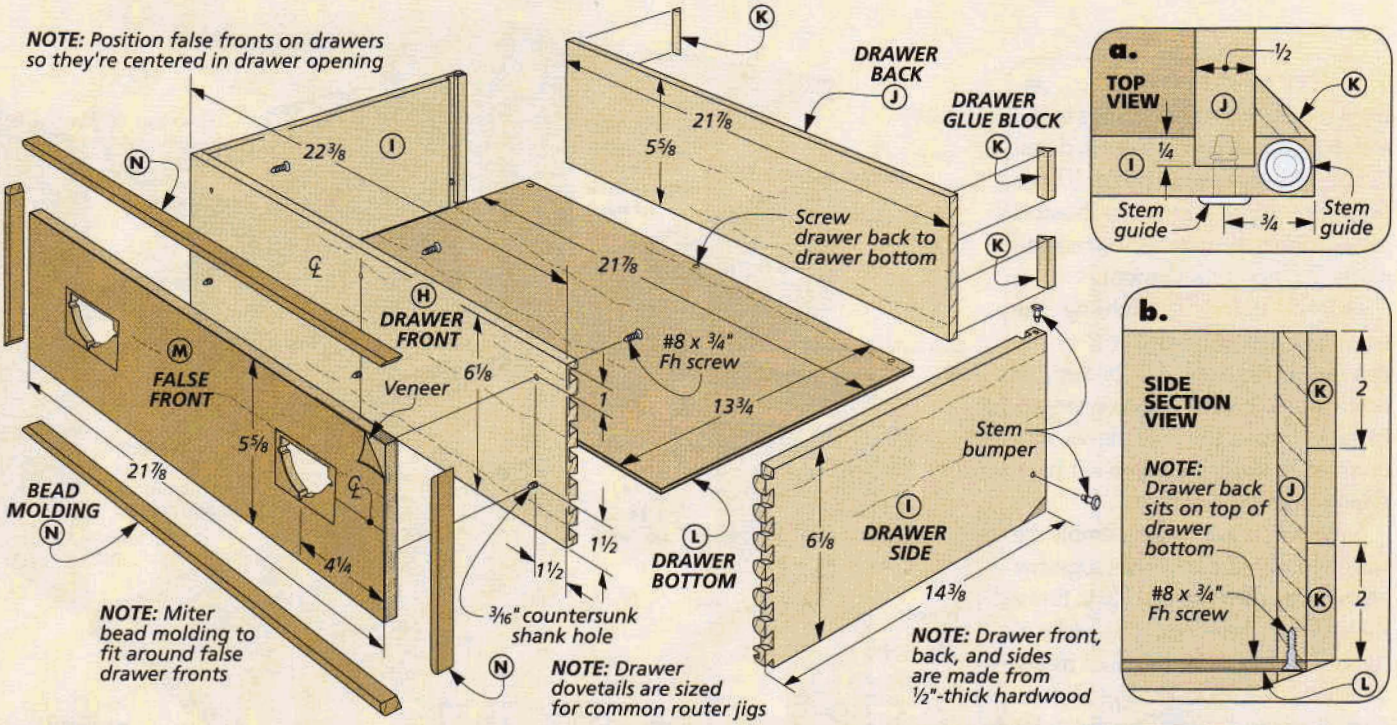

fitting the DRAWERS

At this point, the case of the chest is pretty much complete. So now you can get started on the three, identical drawers that fit inside. Later, you'll add the feet and hardware.

The drawing above shows how the drawers are assembled. When sizing the parts, be aware that the back is narrower than the other parts because it rests on the drawer bottom, as in detail 'b.'

DOVETAILS AT THE FRONT. As for the joinery, I used half-blind dovetails at the front because this joint will take the most stress (and is the most visible). For this joinery, you can use a standard dovetail jig.

DADOES IN BACK. The drawer back is joined to the sides with a dado, as in detail 'a.' There's one other thing I'd like to point out about the back of the drawer. I reinforced the joint at the back with some glue blocks (details 'a' and 'b').

Once the joinery is complete, there's just one thing left to do before assembling the drawer. And that's to cut a groove in the drawer front and sides to hold the bottom. Now you can glue up the drawer.

PLYWOOD BOTTOM. Since the back isn't as wide as the other parts, the plywood drawer bottom can be

How-To: Install the Drawer Pulls

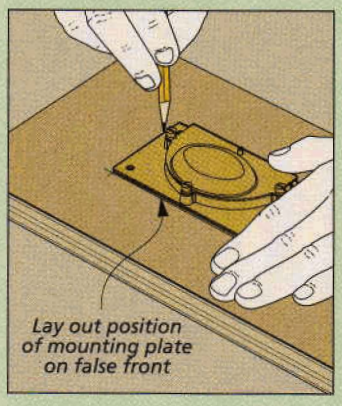

Trace the Pull. *Position the pull on the false front upside down and trace its shape.*

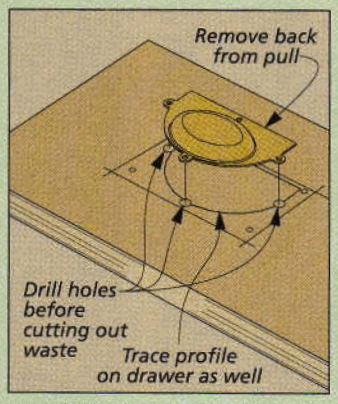

Mark the Back Plate. *Remove the back plate from the pull and trace its shape as well.*

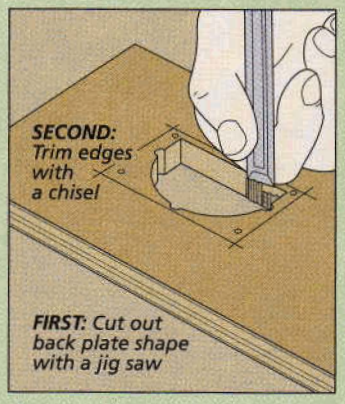

Create the Recess. *Cut out the shape of the back plate. Then clean up the edges.*

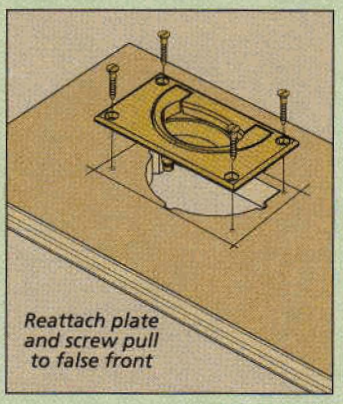

Install the Pull. *Check the fit of the pull (fine-tune it with a file) and screw it in place.*

slipped in place after assembly. I then screwed it to the drawer back (detail 'b' on the opposite page).

There's one final detail to take care of. I trimmed the lower back corners of the drawers to allow them to fit around the drawer catches. To see how I did this, take a look at Shop Notebook on page 29.

FALSE FRONTS. With the drawer box complete, you can now make the false fronts. These are similar to the back panels in the case. The only difference is that there's a small bead molding around all four edges of the false front.

Before attaching the molding, it's a good idea to attach the drawer pulls. You can see how to do that in the box on the opposite page.

BRACKET FEET. There are only a few details left to complete the campaign chest. The first of these is to make the four identical bracket feet, as in the drawing at right.

Before cutting the feet to shape, I mitered the ends and cut a groove for a hardboard spline as in detail 'b.' Then I cut the feet to shape. After sanding them smooth, I drilled a counterbored hole that will be used to attach the feet to the case later (detail 'a' and the pattern at right).

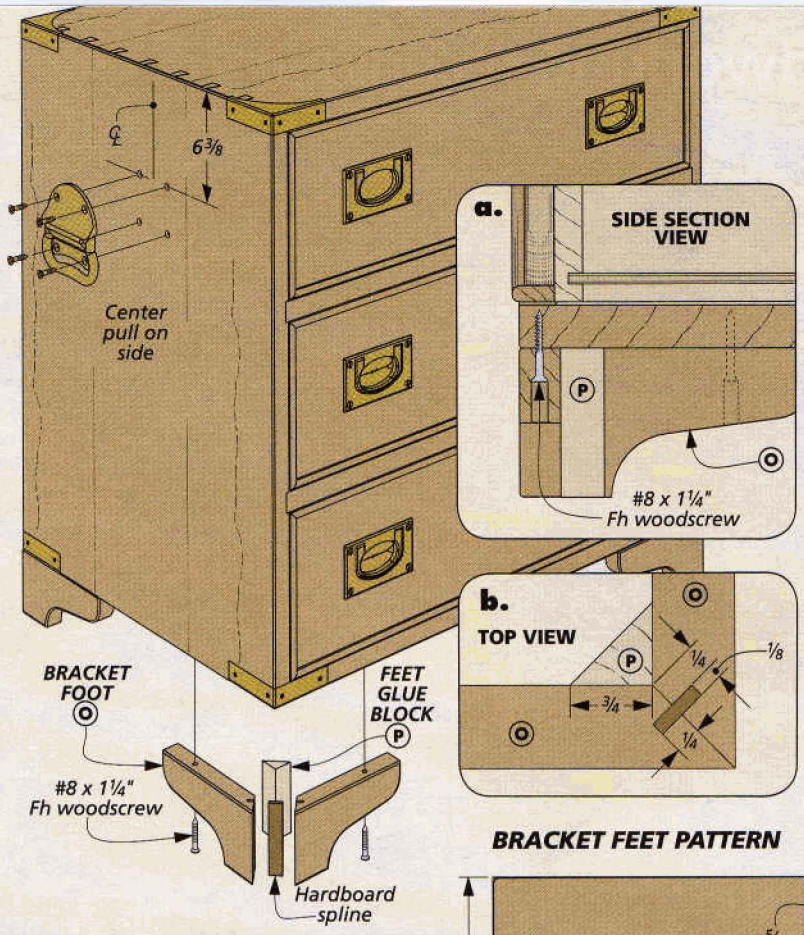

HARDWARE. At last, you're ready to attach the hardware (drawing above). To learn how to inset the brass corners, turn to page 50. All that's left is to attach the feet, apply the stain, and add a few coats of finish. Then it's ready to add some stylish storage to your home. W

▲ To find out how to install the brass corner hardware, turn to page 50.

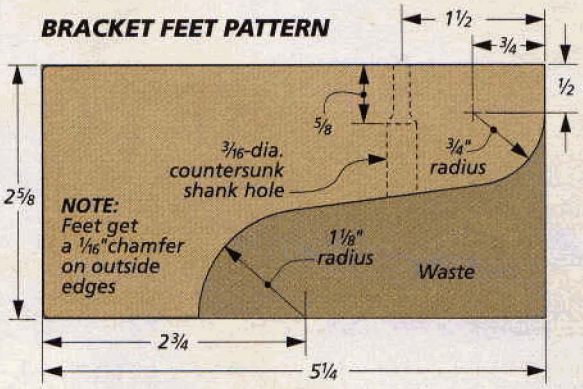

Materials, Supplies & Cutting Diagram

A	Top/Bottom (2)	3/4 x 16 - 23 3/4
B	Sides (2)	3/4 x 16 - 21 3/4
C	Web Frame Front/Back (4)	3/4 x 1 3/4 - 22 3/4
D	Web Frame Sides (4)	3/4 x 1 3/4 - 14 3/8
E	Back Panels (3)	1/2 ply. x 6 5/8 - 22 7/8
F	Drawer Runners (6)	1/16 x 3/4 - 13 1/2
G	Drawer Catches (3)	3/8 x 5/8 - 3
H	Drawer Fronts (3)	1/2 x 6 1/8 - 22 3/8
I	Drawer Sides (6)	1/2 x 6 1/8 - 14 3/8
J	Drawer Backs (3)	1/2 x 5 5/8 - 21 7/8
K	Drawer Glue Blocks (12)	1/2 x 1/2 - 2
L	Drawer Bottoms (3)	1/4 ply. x 13 3/4 - 21 7/8
M	False Fronts (3)	1/2 ply. x 5 5/8 - 21 7/8
N	Bead Molding	1/4 x 3/4 - 192 rgh.
O	Bracket Feet (8)	3/4 x 2 5/8 - 5 1/4
P	Feet Glue Blocks (4)	3/4 x 3/4 - 2 5/8

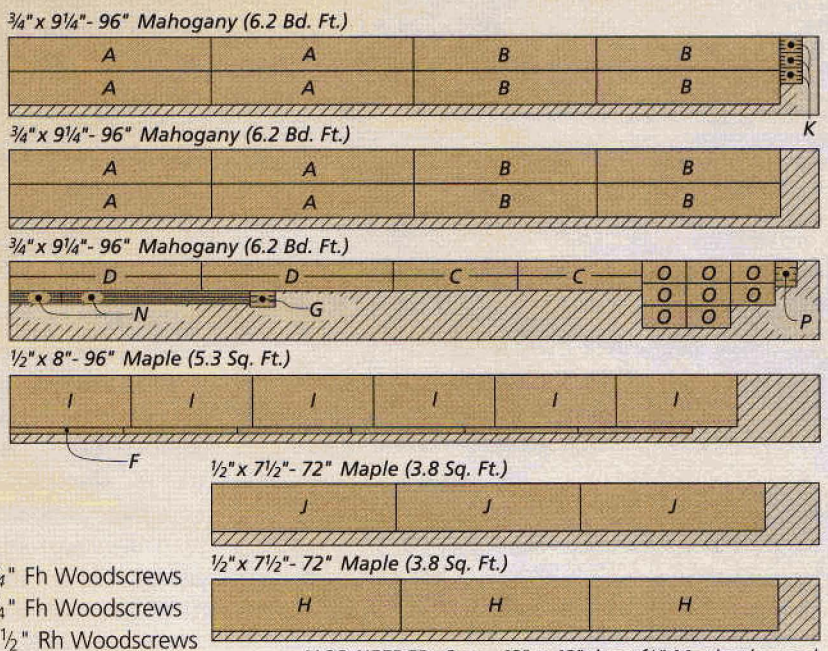

- (8) Heavy-Duty Chest Corners w/Screws
- (6) Drawer Handles w/Screws
- (2) Chest Handles w/Screws
- (18) Nylon Stem Bumpers
- (33) #8 x 3/4" Fh Woodscrews
- (8) #8 x 1 1/4" Fh Woodscrews
- (12) #8 x 1 1/2" Rh Woodscrews
- (3) 6" x 48" Mahogany Veneer

ALSO NEEDED: One - 48" x 48" sheet 1/4" Maple plywood
One - 30" x 60" sheet 1/2" Baltic birch plywood

half-blind Dovetails without a jig

Here's a surprisingly quick technique for making tight-fitting dovetails.

When you open a drawer on a piece of fine furniture, you expect to see half-blind dovetails. With a strong mechanical connection, a huge amount of glue surface, and classic looks, they can't be beat. But these same qualities also make half-blind dovetails a great choice for solid-wood cabinet construction, like the campaign chest on page 30.

NOTE: Cut all parts to same width and corresponding parts to same length for a square final assembly

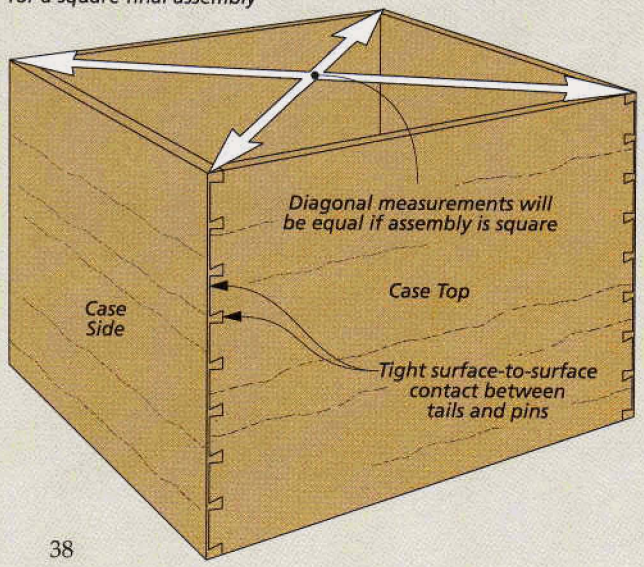

However in case construction, the size of the pieces means you won't be able to use most commonly available dovetail jigs. That leaves you with two options. You can buy a bigger, adjustable dovetail jig, but these can be pretty expensive. Or you can cut them without a jig.

NO-JIG DOVETAILS. If the idea of cutting dovetails without a jig sounds intimidating, don't worry. I'd like to share an approach with you that combines old-fashioned craftsmanship with some time-saving steps and will give you great results. The secret — using a router to quickly rough out part of the joint (more on this later).

Before getting into the nuts and bolts of cutting the joints, there are some things I'd like to mention. First of all, to end up with a square final assembly, you want to make sure your parts are all cut to the same width. And that corresponding parts — top and bottom, and the two sides — are cut to the same length, as in the drawing at left.

WORK IN ORDER. The other thing I want to talk about is the method of work. I break the process down into three parts: cutting the tails, making the pins, and fitting the joints. Then I take on each task all at one time. For example, I'll cut all the tails before starting work on the pins. It's more efficient this way and I can get into a rhythm by focusing on one part of the process.

GETTING STARTED. Now, you're ready to get started on the first half of the

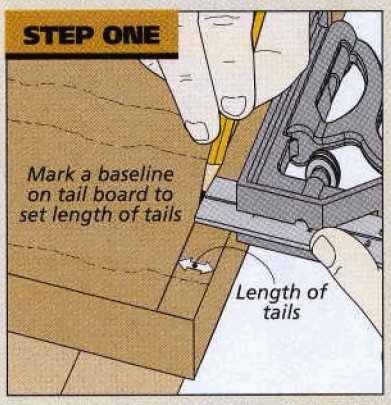

Mark the Baseline. *The first thing to do is lay out the baseline on each face of the "tail" board.*

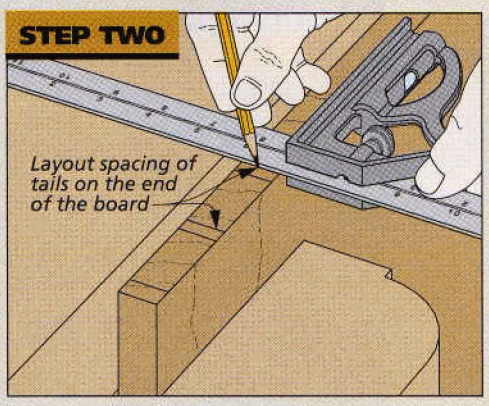

Lay Out the Tail Spacing. *On the end of the workpiece, mark the spacing of the tails. I use a square to transfer the lines across the end.*

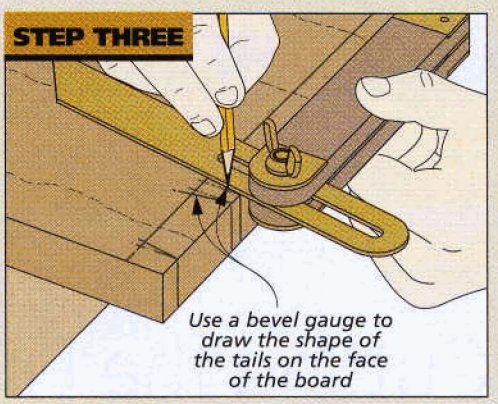

Finish the Layout. *A bevel gauge comes in handy for drawing the slope of the tails on each face of the board.*

joint — the tails. I find it's easier to cut accurate tails and use them as a template for laying out the more challenging pins later on. The drawings on this page give you a good idea of the step-by-step process. So I'll just mention some highlights to help you get the best results.

To keep myself from getting the parts mixed up, I label each piece. It's also a good idea to label the inside and outside faces so you know at a glance which way the parts should face when cutting.

LAYOUT. With your tail boards in hand, mark the length of the tails by drawing a baseline on the face of the board, as shown in Step 1.

The next step is to lay out the spacing of the tails on the end of the board based on the plans on page 32 (Step 2). Then finish up by marking the angled shape of the tails on the face, as in Step 3. I also mark the waste area with an 'X.'

SAWING THE TAILS. When you have the layout complete, you're ready to start cutting the tails. This is a simple, three-part process.

First, the cheeks of the tails are cut with a back saw, as illustrated in Step 4. The goal you're aiming for here is to cut flat, smooth cheeks as close to the layout lines as possible. This way, you'll only have a little cleanup work to do.

The challenge here is sawing a straight line at an angle. To make this easier, tilt the board in the vise so the layout lines are vertical. Now cut one side of all the tails. Then rotate the board to cut the other side.

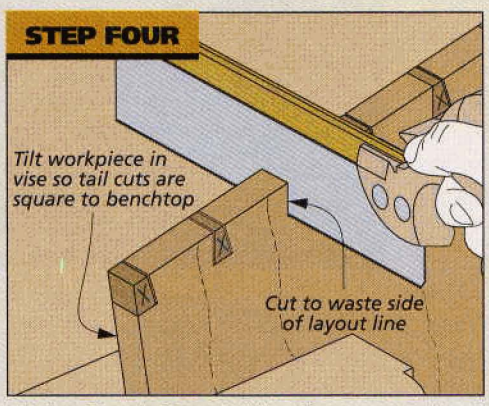

Make Cheek Cuts. *With a fine-toothed back saw, cut the angled cheeks of the tails. Cut as close to the layout lines as possible.*

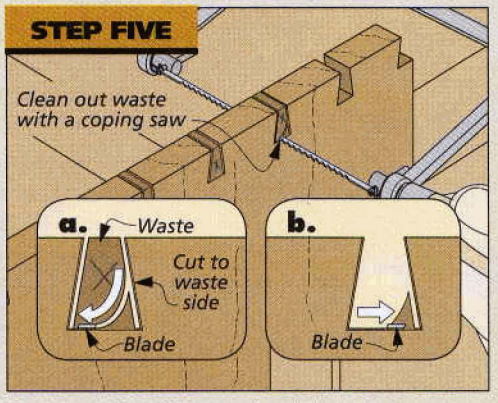

Remove the Waste. *A quick way to remove the waste between tails is to cut it away with a coping saw. Two quick cuts is all it takes.*

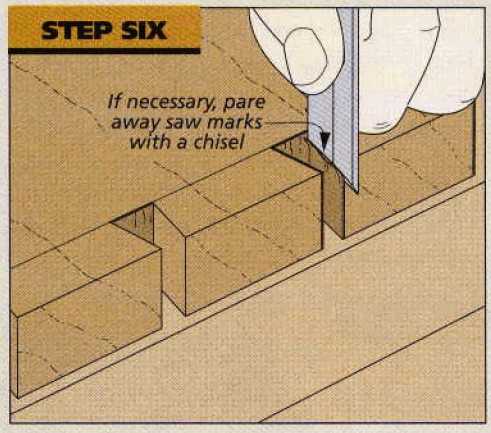

Clean up the Cheeks. *If necessary, clean up the cheeks with a chisel. Taking thin cuts across the grain will prevent tearout.*

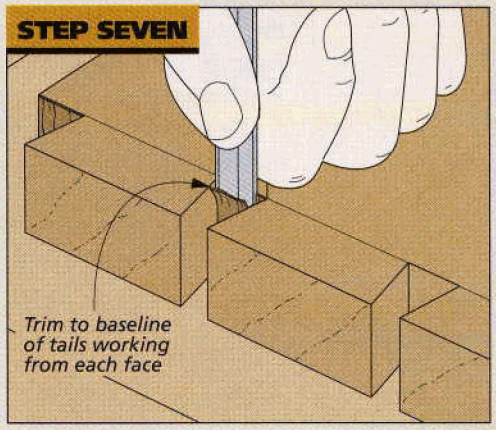

Trim the Baseline. *Working from each face, chisel out the waste. On the final cut, the chisel should be right on the baseline.*

REMOVING THE WASTE. The next step is to remove the waste between the tails. I use a coping saw, as in Step 5. Leave a little waste near the baseline for the final cleanup.

Since you removed most of the waste with the coping saw, you'll be able to clean up the tails with just a little trimming. One more thing: To avoid tearout, I make these trim cuts from each face, working toward the center of the board.

Once you've finished trimming all the spaces between the tails, you're ready to move on to the pins. And on the next page, I'll show you a technique that can really save some time and give you good results.

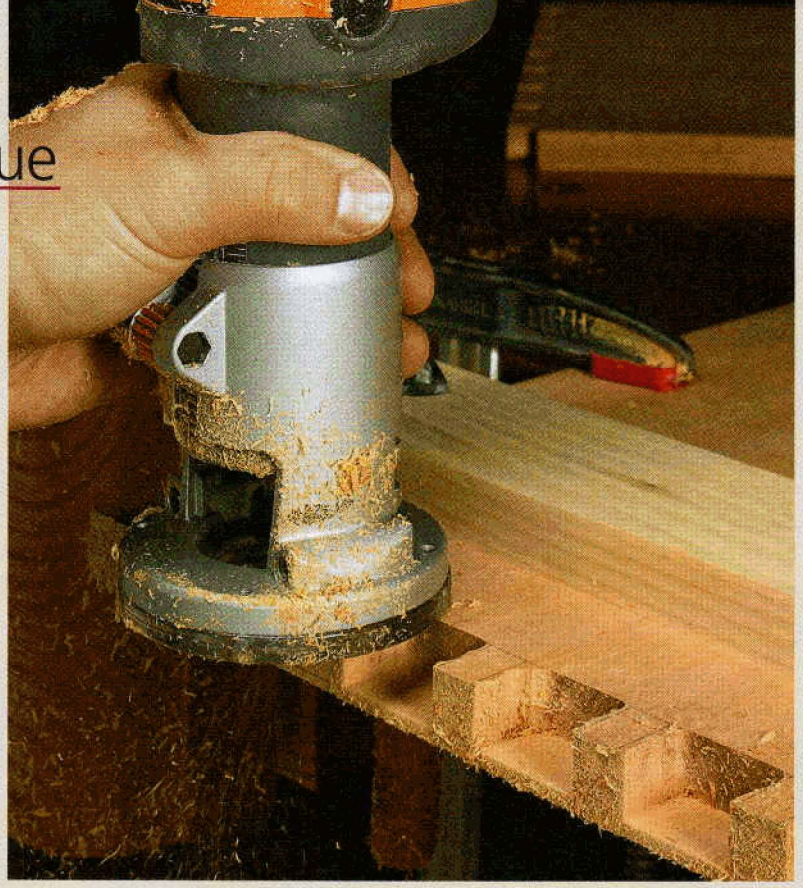

Cutting the Pins

The mating half of the half-blind dovetail joint is the pins. And they're a little more challenging to make. One reason for this is the pins are visible from only two sides of the workpiece. So your access to cutting and trimming is limited.

Another challenge is that you'll need to make the pins match the tails exactly for a perfect fit. But as you'll see, you can overcome both of these issues. The trick is a simple layout and a unique approach to routing the pins that can both increase accuracy and save time.

LAY OUT THE PINS. Just like the tails, the first step in making the pins is the layout. But there are a few differences here to point out. First, you'll need to draw *two* baselines.

One is laid out on the inside face of the pin board. It should match the thickness of the tail board. Actually, I like to lay out the baseline a hair deeper. This way, I can trim the pin board flush with the tails after assembly for a perfect fit.

The second baseline is drawn on the end of the pin board, as you can see in Step 1 below. And it's determined by the length of the tails.

With these baselines set, you can lay out the shape of the pins. For this step, I use the mating tail board as a template, as shown in Step 2. With the pin board clamped in the vise and flush with the bench top, I set the tail board on top of it and transfer the shape of each tail to the end of the pin board.

Then, as Step 3 shows, I use a square to continue the lines across the face of the pin board to the baseline. Before moving on, I mark the waste area to be removed.

ROUTER SAVES TIME. You'll notice there's a lot more waste material that has to be removed here compared to cutting the tails. And removing it by hand is a tedious task. You can really save some time by roughing out the waste with a router, as in the photo above.

Besides saving time, there's another advantage that comes with

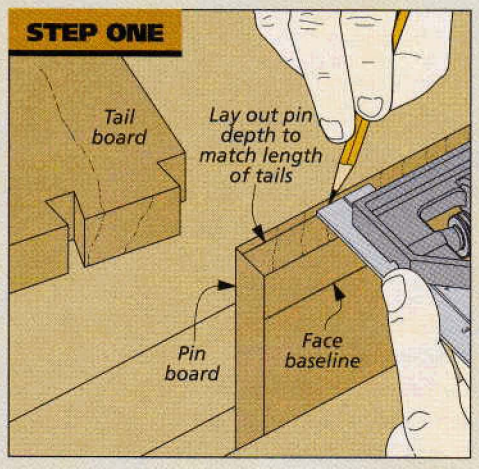

Mark Baselines. *The end baseline matches the length of the tails. The face baseline equals the thickness of the tail board.*

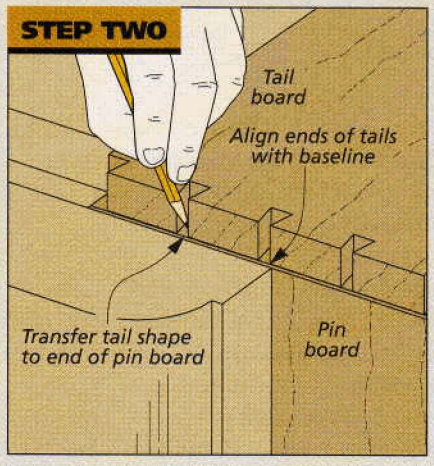

Transfer the Tail Shape. *Set the tails over the end of the pin board and trace their outline with a pencil.*

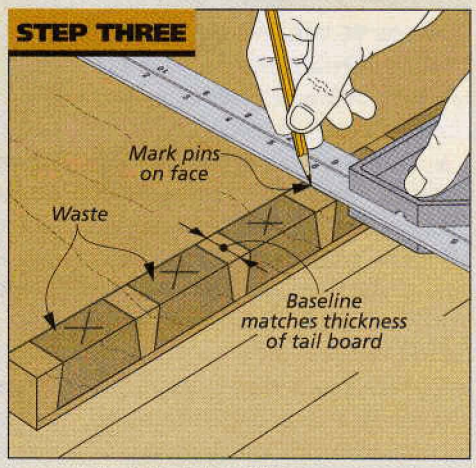

Complete the Pin. *Pick up a square and complete the pin shape to the baseline on the face of the pin board. Mark the waste.*

using the router. The bit creates a perfectly flat surface at the bottom of the tail sockets. And a straightedge gives me another flat starting point for cleaning out the corners. You can see the setup for the routing in Step 4. (I used a palm router, but any type of router will work.)

I clamped a straightedge to the pin board to act as a backstop so I wouldn't rout the pin sockets too deep. In order to position the straightedge, you'll need to measure the offset from the edge of the router base to the edge of the bit.

The next step is to set the depth of the straight bit. The bit depth should match the length of the tails.

ROUT THE WASTE. The actual routing is pretty straightforward stuff. However, taking a full-depth cut places a lot of stress on the router bit and motor. You can avoid this by gradually "nibbling" away the waste, making several sweeping passes from left to right in each socket. With each pass, you can work steadily deeper into the socket, taking about a ⅛" bite at a time, as in details 'a' and 'b' in Step 4.

Rout as close to the layout lines as you feel comfortable. Remember, the more you rout, the less you need to trim away with a chisel.

CLEAN UP WITH CHISELS. The final steps in making the pins are shaping the sides and cleaning up the back corners. This is done with some chisel work. As I mentioned before, the flat spots you made with the router will help guide the chisel strokes.

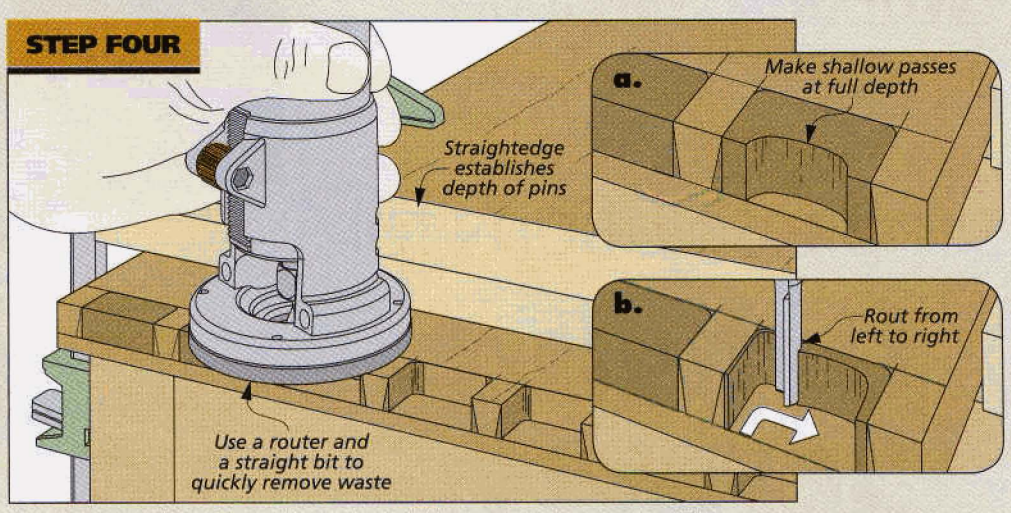

Rout Away the Waste. *You can quickly remove the waste with a router and a straight bit. To guide the router along the baseline, clamp a straightedge to the workpiece. Take shallow cuts to work toward the layout lines.*

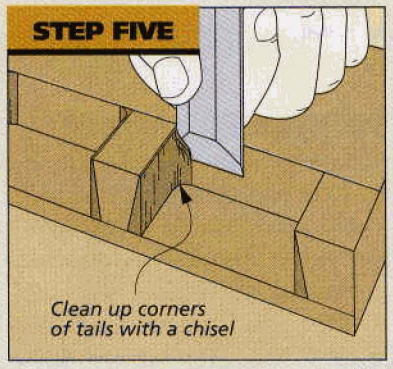

Clean Up Corners. *Using the flat edge created by the bit, clean up the back corners of the pin sockets.*

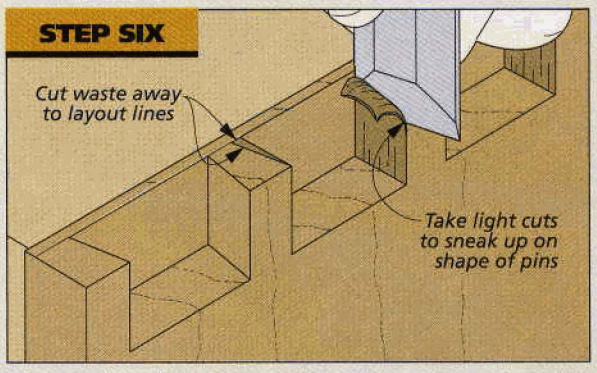

Shape the Pins. *To complete the work on the pins, pare away the waste on the pin sides with a chisel. Take thin cuts to avoid splitting the grain.*

You'll find it's best to take thin cuts and sneak up on the layout lines.

It's tempting to say, "That's all there is to it." But more than likely, the joint will still be too tight to fit together properly. Don't worry, all it takes are a few well-placed paring cuts with your chisel to get it to fit. And you can read more about that in the box below.

The result of your efforts will be tight-fitting joints that come together snugly. And something you'll be proud to show off. W

How-To: Trim For a Snug Fit

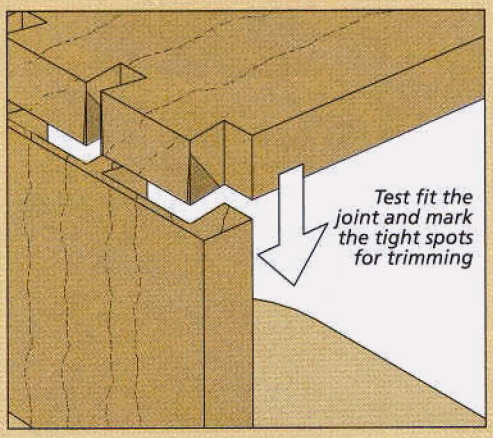

Part of the challenge of fitting dovetail joints is knowing where to start. I like to begin by doing a test fit and taking a close look at each pin and tail to see where the joint is tight, as shown in the left drawing.

After marking the tight spots, you can grab a chisel. I trim the tails only (not the pins) since I can trim from both sides. Then I take thin passes on the inside face of the tails (right drawing). This allows the joint to slide together easily but snugly.

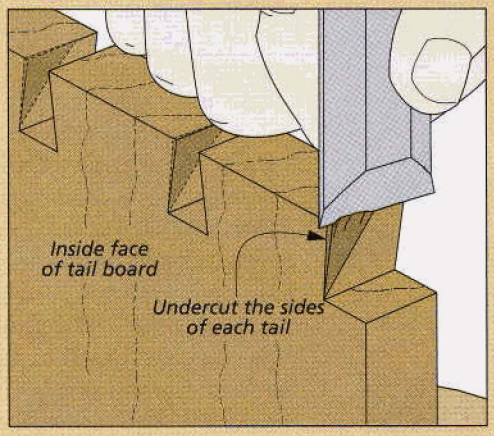

simple solutions for **Driving Screws**

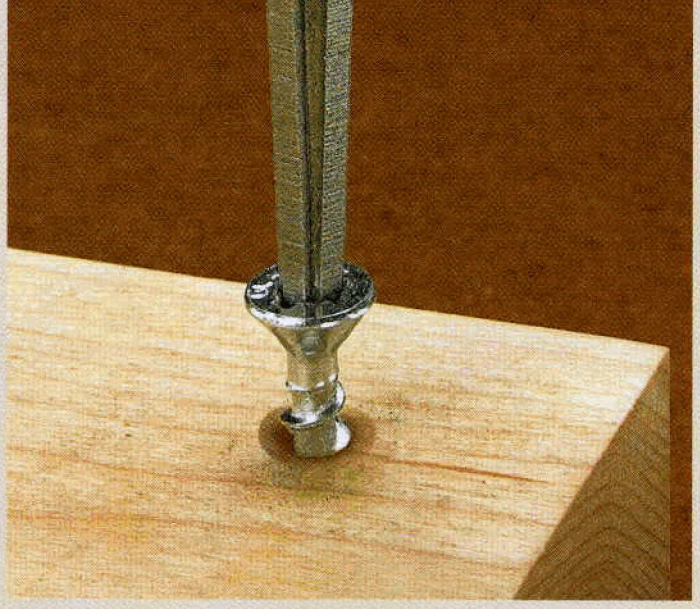

Getting to the end of a project and having problems screwing it together is frustrating. That's when a few simple solutions can really save the day.

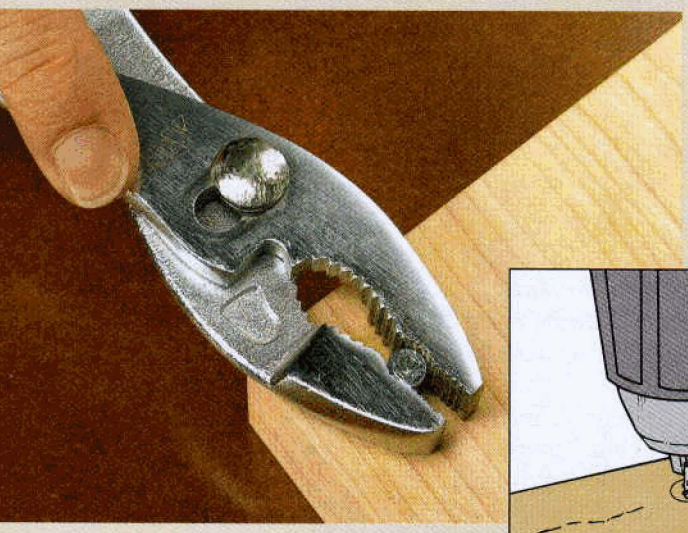

Stripped Screwhead

Sometimes when you drive a screw, the bit slips and strips out the head. The screw is usually either not all the way in, or if it is, the stripped-out head doesn't look very good.

When this happens, it's best to replace the screw. But getting the old screw out can be quite difficult.

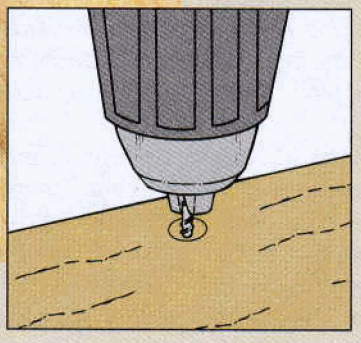

To solve this problem, you have a couple of options. If the head is above the surface, you can often use a pair of pliers to grab the head and twist the screw back out, as shown in the photo at left.

If enough of the screw is exposed, you can sometimes tighten the chuck of your drill onto the exposed screw, like you see in the drawing at left. Then simply reverse the drill and back out the screw.

Screw extractors, like the one in the photo above, are also available at most woodworking stores. These slip into the chuck of your drill and have flutes at the end that "dig" into the head to turn the screw. The extractor engages the head of the screw to help back the screw out as you reverse the drill.

Broken Screw

Removing a screw that has broken off below the surface of the workpiece can be a challenge. You need a way to get the screw out and then replace it with a new one.

A simple way of doing this is to file a few teeth at one end of a piece of metal tubing with a triangular file, like you see in the margin photo. Then chuck the tubing in your drill press and drill out the area around the screw (drawing at right).

Finally, select a dowel from matching stock and glue it in the hole, as shown in the drawing far right. Then you can simply replace the screw.

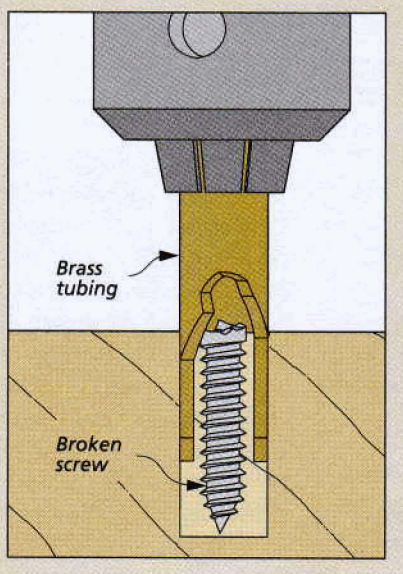

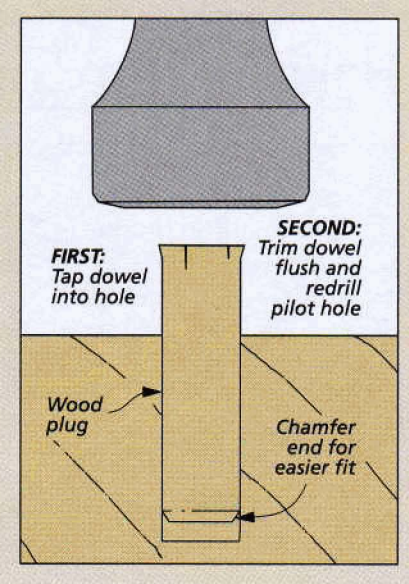

Loose Screw

When screws are used in places where repetitive movement occurs, like hinges, they can work loose over time. This frequent movement causes the screw hole to become enlarged, and the screw eventually loses its holding power.

A simple remedy for this problem is to fill in the hole and reinstall the screw. To do this, I like to glue a wood match directly into the hole, as shown in the photo at right. After placing the match in the hole you can break the match off at the surface of the workpiece.

It's now easy to drive the screw in the hole again. As you can see in the drawing at right, the wood from the match fills up the hole. And it also provides a solid surface area for the threads of the screw to "bite" into.

If the screw hole is small, I'll often use a toothpick in place of the matchstick to fill the screw hole.

For larger screws, you can fix this problem by drilling a hole for a plug like you would do when fixing a broken screw. Then glue a wood dowel plug in the hole and replace the screw. This takes a little more time, and you need to make sure the plug doesn't show around the edge of the hinge.

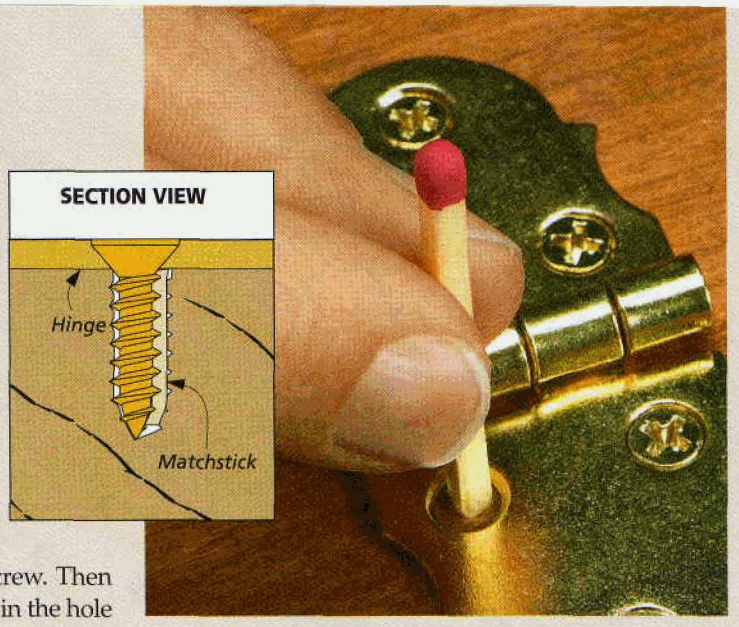

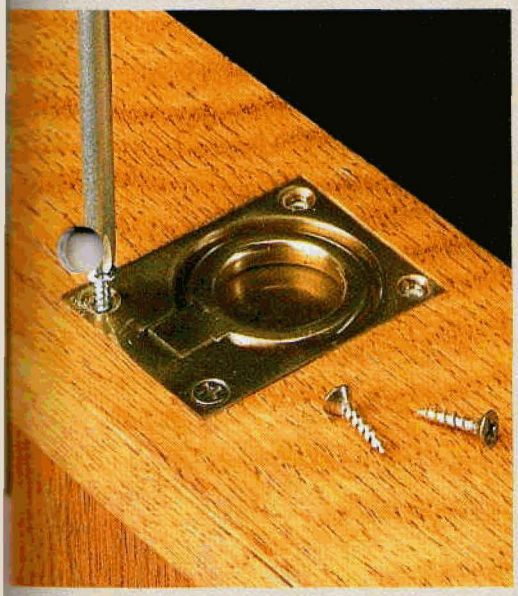

Tapping Brass Screws

Brass hardware often adds a nice look to a project. But there's nothing more frustrating than chewing up the head of the screw or having a soft brass screw break off as you're driving it home.

To prevent this, I like to set the brass screws aside. Then I use a steel screw of the same size to cut threads for the brass screws, as shown in the photo at left.

Also, when fitting doors, I often need to remove the hinges several times to get the right fit. To avoid damaging the brass screws, I use the steel screws and wait until the very end to install the brass screws.

Workpiece Gap

When you're screwing two workpieces together, the fibers from the lower piece can lift up. This often creates a gap between the two pieces, like you see in the photo at right.

Clamping the pieces together can often help prevent this problem. But you can also create a small "pocket" for the raised fibers. All you need to do is drill a small countersink on the *inside* face of either the shank hole or the pilot hole, as shown in the drawing at right.

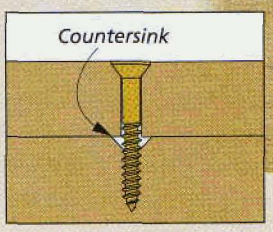

How-To: Screw Driving Tips

Using a few basic techniques when you drive a screw can help to keep you from having to deal with the fixes later. Just follow these simple steps.

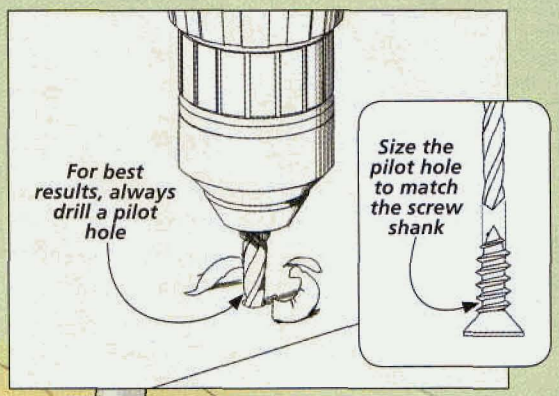

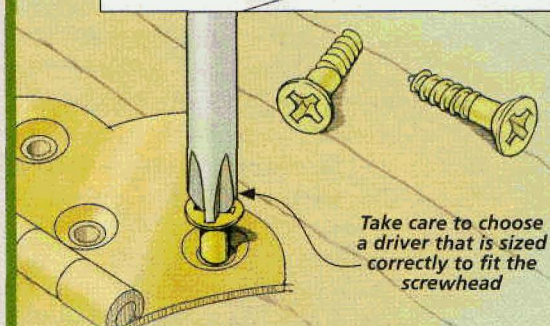

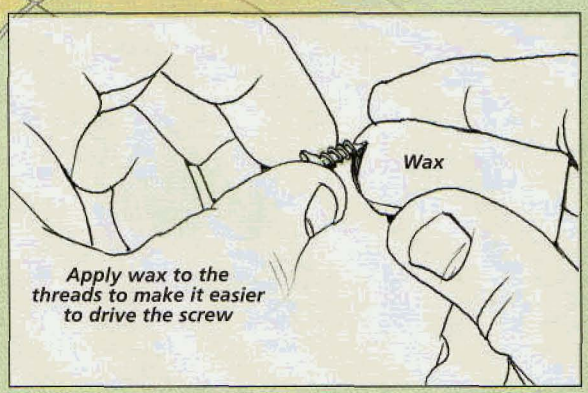

5 easy Sawhorse Upgrades

A few simple additions can turn this basic tool into one of the most versatile fixtures in your shop.

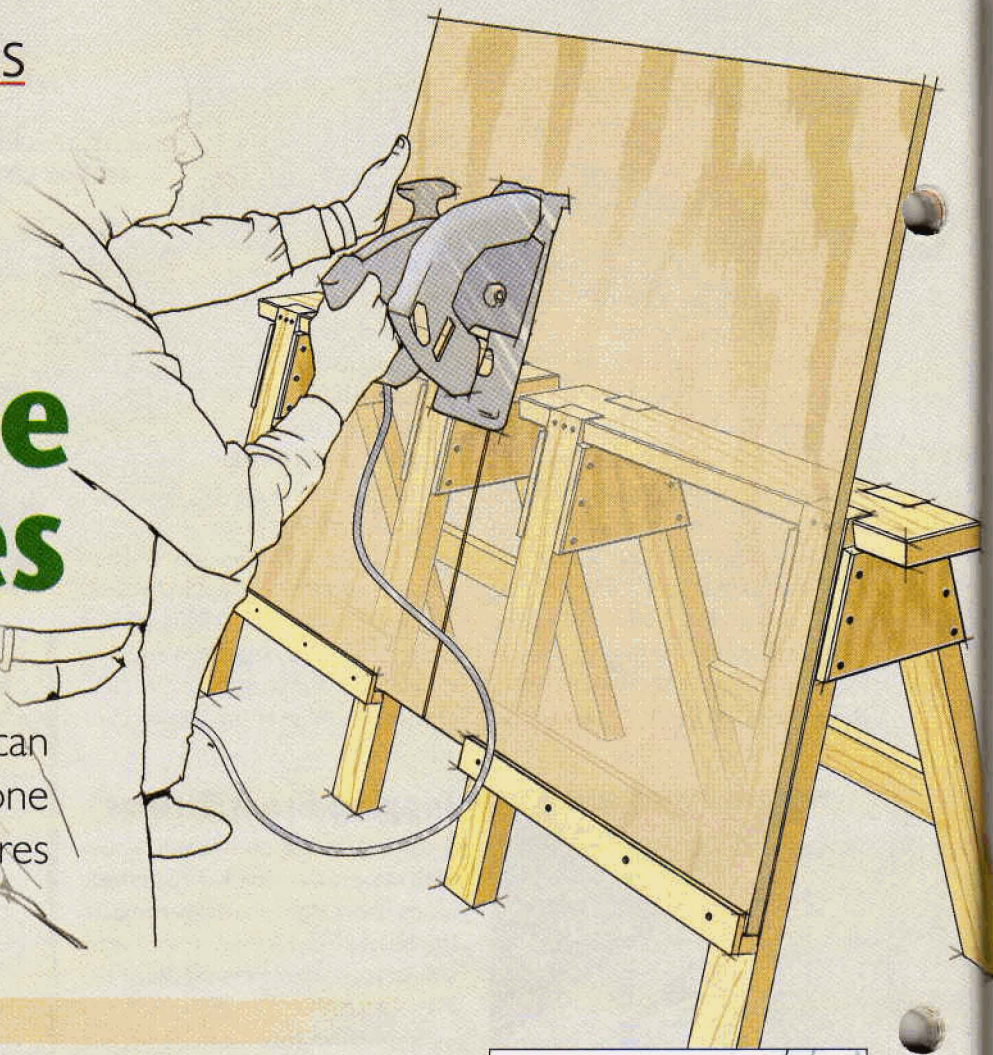

1 L-Brackets

Breaking down sheets of plywood with a circular saw is always a challenge. I usually end up laying the plywood on supports on the floor and then crawling around to make the cut. But a couple of simple modifications to a set of sawhorses can make this task a lot easier.

An L-shaped bracket screwed to the side of each sawhorse, like you see in the drawing at right, makes the task of cutting sheet goods easy. The brackets hold the plywood in place so they can easily be cut down to a manageable size. And because the plywood is held vertically, you won't need to stretch a lot to make the cut across the sheet.

These brackets also become useful when it comes time to spray a coat of paint or finish on a project. Just place an old piece of plywood as a backer board behind the project. Then you can apply the finish without the worry of covering everything behind with overspray.

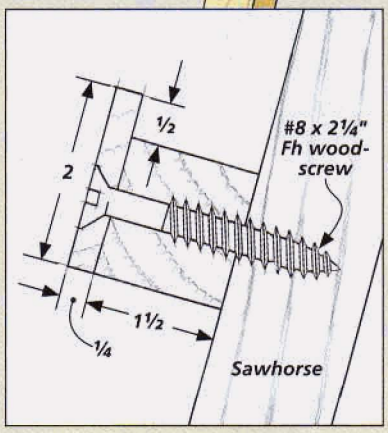

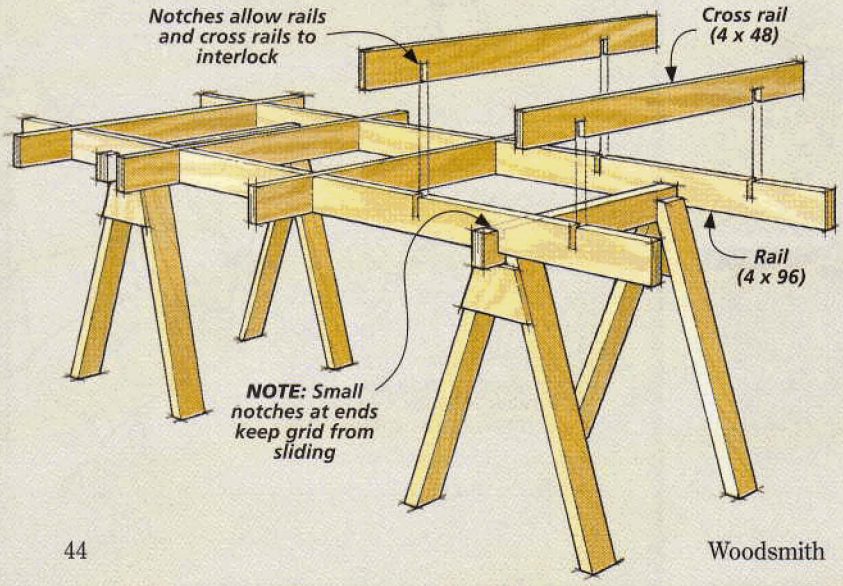

2 Cutting Grid

Working with sheet goods requires a large surface to provide support as cuts are made. A grid built on the top of your sawhorses can make this task easier.

Start by making interlocking strips from ¾" stock. These strips fit over a pair of sawhorses, as shown in the drawing at left. You'll want to be sure to notch the bottom edge of the longer strips and the top edge of the sawhorse to help hold the grid in place and keep it from moving around as you work.

To use the cutting grid, simply assemble it on top of the sawhorses. Then place your workpiece on the grid and go to work. Once you're done, you can disassemble the grid and store it out of the way.

Accessories For Your Sawhorse

3 Removable Padded Tops

When I'm applying finish or adding final details, I often need to set the project on a surface that protects it from scratches. Since such a surface isn't always available, I made removable pads to fit over the top of my sawhorses (drawing below).

These pads are nothing more than pieces of "two-by" stock wrapped with carpet and fitted to the sawhorse top. As you see in the drawing at right, dowels glued into holes in the bottom of the pads fit into holes in the top of the sawhorse.

Using the pads is easy. Just slip the dowels in the holes and go to work. Then store them away when you're done until they're needed again.

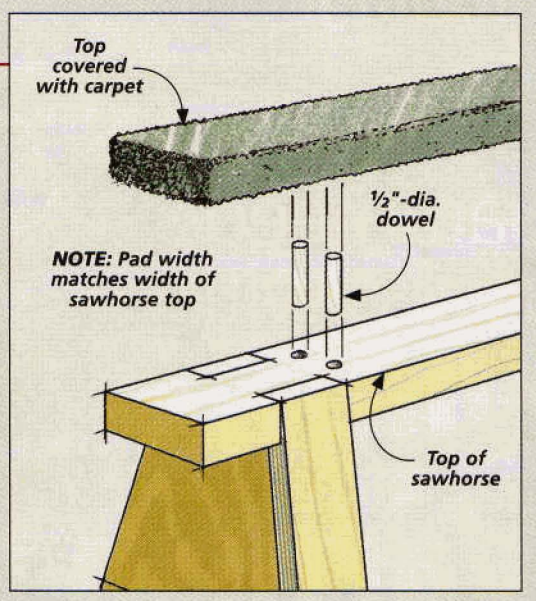

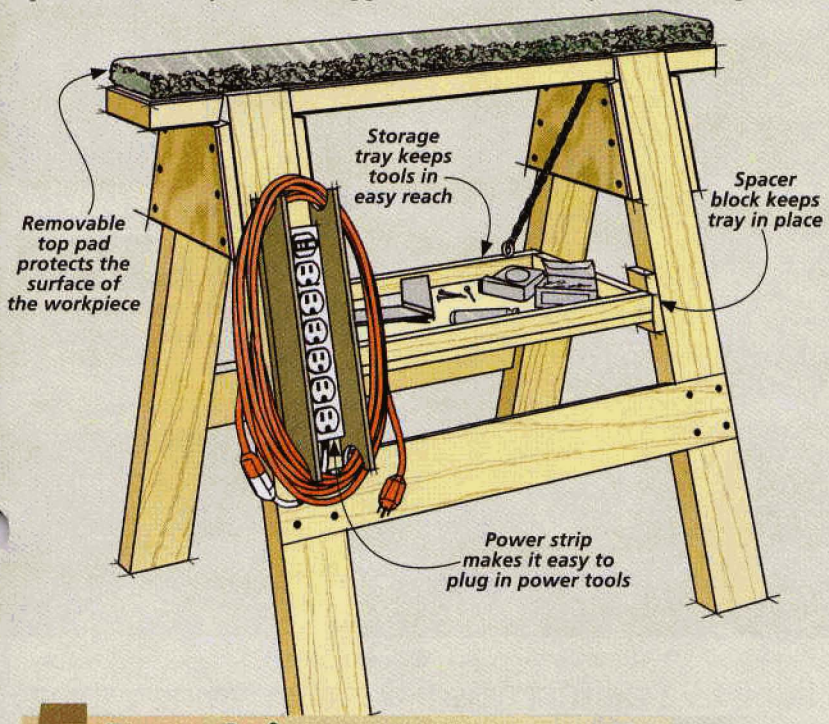

4 Storage Trays

It's always handy to have a place to store the tools, hardware, and supplies you're using near your sawhorse. The problem is if you add a shelf or tray, it makes it impossible to stack the sawhorses for easy storage.

One way to solve this is to make a tray that swings out of the way, as you can see in the drawing at right. The key is attaching the tray with a lightweight chain and using a pair of long round-head screws at each end of the tray (drawing below).

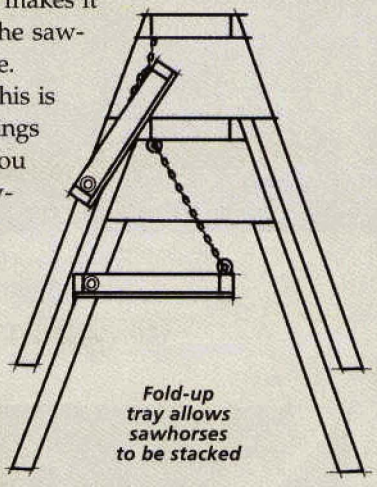

These two long screws act as pivot points to allow you to move the tray out of the way when you want to stack the sawhorses for storage. You'll need to locate the pivot point halfway up the leg and install the screw at this point on each side of the tray to make it work.

To determine the overall width of the tray you can use, just measure the distance between the pivot point and the top rail. Then you can simply subtract 1" to allow room for clearance.

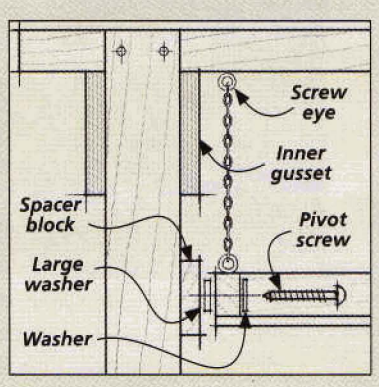

5 Power Strip

I use the sawhorses in my shop for cutting stock and sheet goods, assembling projects, and all kinds of finishing operations. And it seems that every time I use them, I also need to use of a number of different power tools. This means continually plugging and unplugging the tools from an extension cord that supplies the power to my drill, sander, or circular saw.

To make it easier to use these power tools, I attached a power strip to a piece of scrap wood. Then I mounted the entire unit to one of the legs of the sawhorse, as shown in the drawing at right. As you can see I also added ¼" hardboard sides and cut a small notch at each ends. This makes it easy to wrap up the cord when I'm finished using it and store the sawhorse away. W

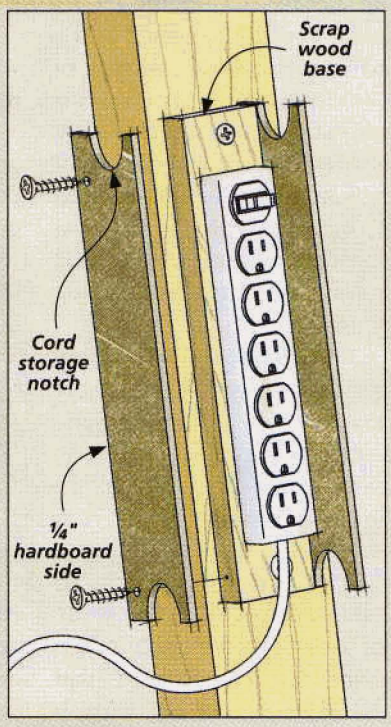

guaranteed success with Wiping Varnish

Woodsmith
GO ONLINE EXTRAS
To learn how to make your own wiping varnish, visit our website at Woodsmith.com

I doubt there's such a thing as a perfect finish. But after giving wiping varnish a try, you might think it comes pretty close.

▲ The difference between the syrupy standard varnish (left) and the thin, watery wiping varnish (right) is easy to see.

If I had to limit myself to one type of finish, I would most likely give up everything but my supply of wiping varnish. This versatile product has just about everything you need or could ask for in a finish. It's quick and virtually foolproof to apply, creates a very durable film and maybe most importantly, makes just about any project look great.

WHAT'S A WIPING VARNISH? Wiping varnish is a generic term that you probably won't find on the label of any finishing products at the paint or hardware store. And while the name can be a little confusing, the product itself is very easy to understand. It's simply a varnish (usually polyurethane) that's been thinned to a point that it can be wiped on easily with a rag. A look at the photo at left gives you the idea. The upshot is that you get all the benefits of a varnish while avoiding the nit-picky hassles that go along with applying one.

GET THE RIGHT STUFF. Not every "wipe-on" finish is a wiping varnish. A similar product, often referred to as a Danish or antique oil, is easy to confuse with wiping varnish. These products are likewise easy to use, but won't give you quite the same look and durability of a true wiping varnish. A few common brands of wiping varnish are *General Finishes Arm-R-Seal, Zar Wipe-On Finish*, and *Formby's Tung Oil Finish*. One sure way to know what you're using is to make your own wiping varnish. (You'll find the recipe at our website.)

WIPE-ON/WIPE-OFF. The key to a wiping varnish is that you use a simple wipe-on/wipe-off technique to apply thin, even coats. It's easy to master and basically "goof proof," but there are a few

pointers I can share to help you along. The photos below and the main photo at left illustrate the basic steps.

SURFACE PREP. To start, good surface preparation is important. Since the final thickness of the finish is usually pretty thin, any irregularities or "rough" sanding might show. Carefully sanding with 220-grit sandpaper will do the job. Then clean the surface well with a tack rag or vacuum before applying any finish.

FIRST COAT. Now you're ready to wipe-on the first coat. Actually, a wiping varnish can also be brushed on, but I find that a soft rag folded into a small pad makes the best applicator. For nooks and crannies, I sometimes resort to a foam brush.

You start by simply soaking the rag with varnish and wiping it onto the surface of the wood. I like to work with the grain but it's not a must. The goal isn't to apply a smooth coat as you would with a brush. What you want to do is flood the surface and let the thin varnish flow out and penetrate. Focus on applying a complete coat and pay special attention to corners, edges and moldings. The first coat on unsealed wood tends to soak in, so I often go back over each area to keep it wet.

I try not to tackle too large an area at one time. Depending on the conditions, wiping varnish gives you about ten to fifteen minutes of working time. After that, it tacks up to the point that the next step of wiping off the excess becomes difficult. But on the other hand, you won't have any trouble blending a finished area into an unfinished area. So working on one section at a time can be the best strategy.

WIPE-OFF. When you've coated the surface, you can relax for about five minutes before starting to wipe off the excess varnish. The idea is that you want to leave a thin film of finish on the surface, but not a wet layer. As I mentioned, the trick is to start wiping before the varnish gets too sticky.

You don't need to wipe hard, just be thorough. Dampening the rag with a little varnish makes wiping easier and helps build a thicker film. But you want to avoid leaving shiny wet spots on the surface. I always double-check the hard-to-reach corners and crevices.

SANDING. A coat of wiping varnish dries quicker than a standard varnish — usually in 4 to 8 hours. And at this point, you'll want to sand very lightly with 320-grit sandpaper before applying a second coat. When completely dry, it won't gum up the sandpaper. Sanding helps one coat stick to another and smoothes the surface for the next layer of varnish.

MORE BUILD. Once the first coat has sealed the wood, the goal now is to build a thicker film on the surface. So you simply repeat the same steps — wipe-on, wipe-off, and sand lightly. Three coats is a minimum, four is better. This will give you just the hint of a built-up film — an "in the wood" look. (If you're after a thicker finish, you might want to opt for the process talked about in the box above.)

For the "build" coats, I allow the varnish to get a bit tackier before wiping off the excess. You're wiping the new coat over a dried finish now, so just make sure you leave enough behind to add to the film. When you wipe down the final coat, remember that this is going to be the "show" surface. So take extra care not to leave streaks or uncleaned areas. Your final strokes should be long and with the grain.

And when the final coat is dry, you'll be pleased and a little surprised that a finish this easy can look so good. W

How-To: A Quicker Build

When I want a thicker film for more protection, as on a tabletop, I modify the basic process slightly to make the job go quicker. The first coat is applied just the same — wipe-on, wipe-off, then sand. But for the second and third coat I use a foam brush to apply a smooth, wet layer of finish. These coats are left to dry without a "wipe down."

After a thorough sanding to remove any dust nibs and smooth the surface, a final, thin "polish" coat goes on using the standard wipe-on/wipe-off technique.

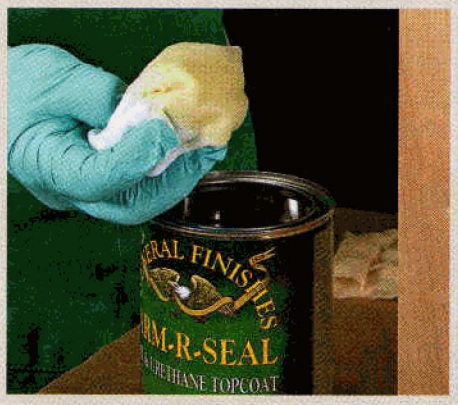

▲ A soft rag (T-shirts are perfect) folded into a small pad will hold a lot of wiping varnish without dripping.

▲ Let the varnish tack up for a few minutes, then wipe off the excess thoroughly with a clean, but "wet" rag.

▲ A very light sanding will ensure good adhesion and a smooth surface for the next thin coat of varnish.

Questions & Answers

Preventing Glue Spots on a Project

Q ***As I applied the stain to my last project, several glue spots became apparent on the surface. Is there anything I can do to prevent this from happening on my next project?***

Jill Johnson
Omaha, Nebraska

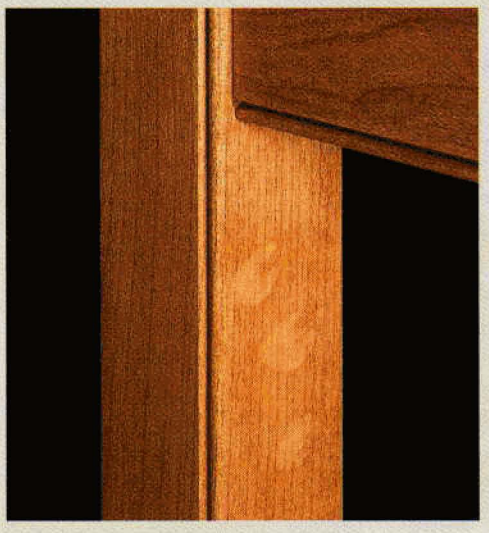

A Glue on your fingers, "squeezeout," and drips are common causes of glue spots. The problem is the glue is often nearly invisible when it dries. And once on the surface, the glue seals the wood grain preventing the finish from penetrating. This leaves glue spots, like you see in the photo at left.

Glue marks that show up after staining can be difficult to touch up or remove. The obvious solution is to avoid leaving glue on the surface in the first place. But this is often easier said than done. Here are a few tips to help you out.

CLEAN IT UP. The first step is to clean up any excess glue that squeezes out of the joints. But wiping up glue with a dry cloth while the glue is wet can cause additional problems. It's easy to spread the glue over an even larger surface area.

If you're using a glue like hide glue, you may need to add a little warm water to a soft cloth to help remove the excess glue. Other types of glue, like yellow glue, may be more difficult to clean away. These may require an abrasive pad dipped in lacquer thinner to lift the glue away.

It's often better to let the glue dry a little before trying to remove it. Whenever I do a glueup, I like to let the glue "gel up" several minutes. Then I can scrape it off with a sharp chisel or soda straw (if it's in a tight area) as shown in the drawings below.

You can also keep glue from getting on the surface by masking off the area with tape before applying the glue (far right drawing below). The tape can then be easily removed after the glue has dried.

LOOK IT OVER FIRST. Even when you remove the squeezeout, it's inevitable that some glue is going to be left behind. So it's a good idea to check out the surface before you apply any finish. A quick look using a bright light will often reveal the glue.

You can also wipe down the surface with a damp cloth or denatured alcohol to help you locate hidden glue spots. The area where the glue sits on the surface will remain dry and light in color compared to the darker "wet" wood.

Once you've located these spots, use a cabinet scraper or sand the surface lightly to remove the glue. The goal here is to take away the glue and prepare the surface again before applying the stain or finish.

PRE-FINISHING. Many woodworkers prefer to finish their projects before assembly and gluing up. If you do this, just be sure to keep any stain or finish off the mating surfaces. This way, you won't have any failed glue joints. W

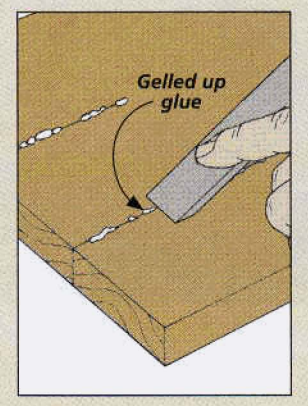

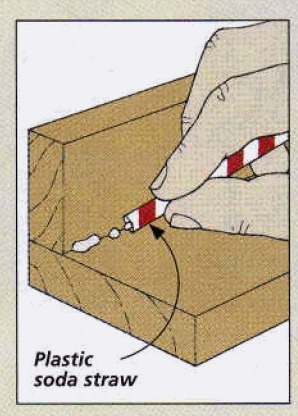

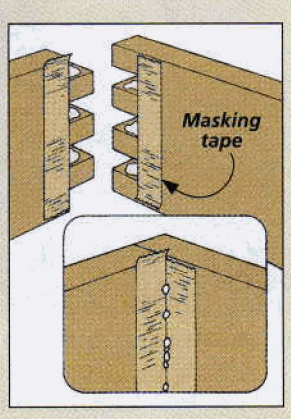

Do you have any questions for us?

If you have a question related to woodworking techniques, tools, finishing, hardware, or accessories, we'd like to hear from you.

Just write down your question and mail it to us: Woodsmith Q&A, 2200 Grand Avenue, Des Moines, Iowa 50312. Or you can email us the question at: woodsmith@woodsmith.com.

Please include your full name, address, and daytime telephone number in case we have questions.

Sources

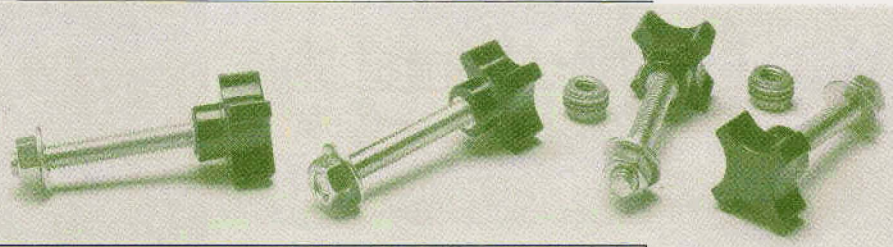

WIDE-SCREEN TV CABINET

The TV cabinet on page 18 is large enough to support most flat-panel, wide-screen television sets and would make a great addition to an entertainment room.

You'll find almost all of the materials needed to build the cabinet at your local lumberyard or woodworking store. But there are a few items you might need to order from mail-order suppliers before you begin the project.

Pocket screws were used to assemble the base of the cabinet. These screws can be found at almost any woodworking store. I used #7 x 1¼" fine-threaded screws (38502) from *Rockler*.

You'll also need some hardware for the drawers and doors. I used *Blum* full inset 120° self-closing hinges (00B15.34) to mount the doors. And installed a set of 32mm (01X43.22) and 96mm (01X43.24) pewter double bar door pulls for opening the drawers and cabinet doors. A pair of black 16" full-extension slides (02K36.16) was used to mount the large center drawer. All of this hardware was ordered from *Lee Valley*.

PARALLEL-JAW CLAMPS

A set of parallel-jaw clamps, like those in the article on page 8, can really make glueups a lot faster and easier. I was able to get the *Woodcraft* parallel-jaw clamp, *Gross Stabil* PC², and *Bessey K-Body* clamp from *Woodcraft*. The *Woodcraft* clamp is available through their stores and from their online website.

The *Bessey K-Body* clamp as well as the *Jet* parallel-jaw clamp can also be found at the *Woodsmith Store*.

The *Jorgensen Cabinet Master* clamp was ordered directly from *Amazon.com*. Contact information for each of these sources can be found in the right margin.

CAMPAIGN CHEST

The campaign chest on page 30 features solid wood construction with a little plywood for the drawer fronts, case backs, and drawer bottoms to help avoid wood movement. To complete the project, you'll need some veneer to apply to the back panels and front of the drawers. The plain-sliced mahogany veneer (18168) we used came from *Rockler*.

To give the chest a fine furniture look, you'll want to add some nice-looking brass hardware. The heavy-duty campaign chest corner hardware (00A17.02), flush drawer handles (00A19.02), and case handles (00A19.03) all came from *Lee Valley*.

You'll also need some stem bumpers to keep the drawer operation straight and smooth. These are available from many woodworking suppliers. I ordered the stem bumpers (28373) for my drawers from *Rockler*.

DROP-FRONT STORAGE CENTER

The storage center on page 12 stores items and looks great on the wall. And best of all, it doesn't take a lot of material to build.

A few pieces of hardware are all that's needed to complete the project. The double coat hooks (BH-13), the 1¼"-dia. maple knobs (WK-6), and antique brass drop-leaf table hinges (H-500) that allow the drop-front door to open all came from *Horton Brasses*.

You'll also need a ⅜"-dia. rare-earth magnet (32907) and washer to hold the door closed. The one I used came from *Rockler*. They are also available from *Lee Valley* and the *Woodsmith Store*.

Online Customer Service

Click on Subscriber Services at
www.woodsmith.com

- Access your account status
- Change your mailing or email address
- Pay your bill
- Renew your subscription
- Tell us if you've missed an issue
- Find out if your payment has been received

MAIL ORDER SOURCES

Project supplies may be ordered from the following companies:

Woodsmith Store
800-444-7527
woodsmithstore.com
Parallel-Jaw Clamps, Rare-Earth Magnets, Veneer

Rockler
800-279-4441
rockler.com
Pocket Hole Screws, Stem Bumpers, Veneer

Lee Valley
800-871-8158
leevalley.com
Cabinet Hinges, Chest Corners, Door Pulls, Drawer Slides, Rare-Earth Magnets

Horton Brasses Inc.
800-754-9127
horton-brasses.com
Coat Hooks, Knobs, Drop-Leaf Hinges

Woodcraft
800-225-1153
woodcraft.com
Parallel-Jaw Clamps

Amazon.com
Jorgensen Cabinet Master Parallel-Jaw Clamp

Woodworker's Supply
800-645-9292
woodworker.com
Parallel-Jaw Clamps

Adjustable Clamp Company
312-666-0640
adjustableclamp.com
Jorgensen Cabinet Master Parallel-Jaw Clamp

Woodsmith®
HARDBOUND VOLUMES

*This set includes six hardbound volumes of **Woodsmith** (Volumes 22 through 27).*
Each volume includes a year of issues, plus a table of contents and a handy index.
*Buy them for $29.95 each. Or get the whole six-volume set for $139.50 and **SAVE $40***
— that's like getting one volume FREE. *(Offer expires 12/31/07)*

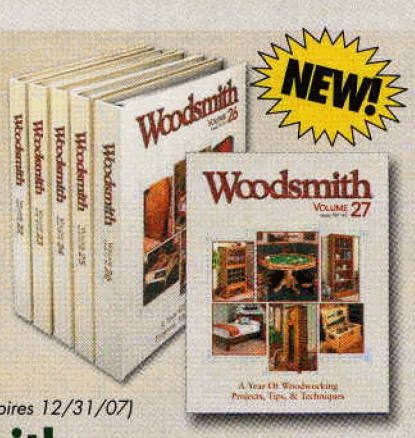

Go to www.Woodsmith.com
or Call 1-800-444-7527 Today to Order Yours!

insetting Brass Corners

Installing flush-mounted corners can be tricky. But here are a few techniques to help you get top-quality results.

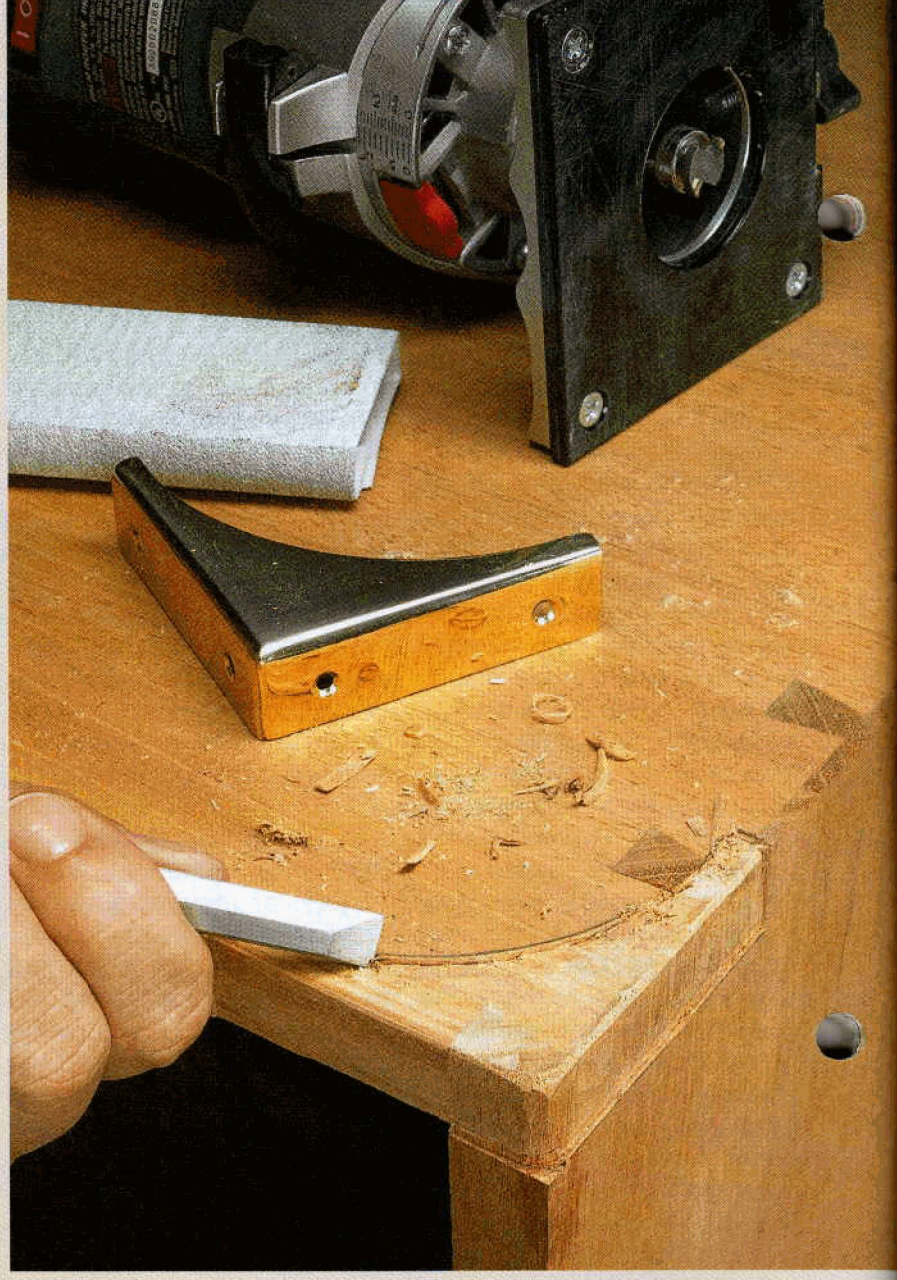

No matter how much time and effort you put into building a project, the hardware — and how well it's installed — can make or break the look of the completed piece. And when the hardware is inset or flush-mounted, it requires extra attention to detail to get it right.

For example, the brass hardware used on the campaign chest featured on page 30 really gives the piece a classic look of strength and durability. And while the handles and drawer pulls are pretty easy to install, the brass corners can prove to be a little bit more challenging.

Shop Tip: Setting Depth

To set the bit depth for cutting a shallow recess, just hold the hardware on its side, as shown. Use your finger to judge when the bit depth matches the thickness of the brass.

WHY BRASS CORNERS? Campaign chests were originally designed to be more than just pieces of furniture. They also served as rugged "luggage" for military officers as they travelled the world from one post to another.

As you can imagine, the chests were subjected to a fair amount of abuse. So the builders of these chests incorporated brass hardware to protect the corners.

The hardware was inset for a couple of reasons. First, it was less likely to snag clothing as the chest was being carried. And, it kept the hardware from getting knocked loose by other items during transport.

For our version, I wanted to preserve the authentic look and feel of those durable chests. And after I found the right hardware, it was just a matter of fitting it properly.

THE PROBLEM WITH CORNERS. If you take a close look at the photo above, you'll notice that the recess is cut so the corner will sit flush with three different surfaces — the top, front, and side of the chest. So you can't just set the corner in place, mark the outline, and create the recess. As you adjust the fit for one surface, it affects the fit on the other surfaces.

The solution is to create the recess in stages. That is, first lay out the position on one surface, make the cuts, then move on to the next surface. You'll need to come back to correct edges and clean up the details as you progress. The step-by-step instructions on the opposite page will help you out.

How-To: Inlet Corners

The trick to getting a good fit on the corners is to work in stages. I like to start by marking the outline on the side and front of the chest, as shown in Step 1. This way, you'll be able to position the corner to mark the curved outline on the top surface.

PALM ROUTER. After marking the edges, I turned to my palm router. For this kind of precision work, I find it's much easier to control than a full-size router. The tip on the opposite page can help you set the depth of the bit for these shallow cuts. Then you can just rout out the waste between the marks (Step 2). I used a dado cleanout bit (main photo). You can clean up the corners for now with a sharp chisel, as shown in Step 3. You'll come back later to work on getting an exact fit.

ROUND THE EDGES. With the recess in the front and side cut, it's time to round over the sharp edges to fit the inside radius of the brass corner. I used a chisel and sanding block to knock off the edges, checking the fit as I progressed. The important thing here is not to remove too much. You want the brass to be fully supported by the wood underneath.

Now you can put the corner in place and trace the top outline (Step 3, detail 'a'). Then use the router to remove the waste close to the layout line, as shown in Step 4.

CLEAN UP WITH A CHISEL. Now it's time to fine-tune the fit. When paring to a curved line, you'll need to be careful about tearout. The easiest way to avoid this is to score the outline with a knife or corner of a chisel.

Now you have most of the recess formed, but you'll still need to go back to each surface and "tweak" the fit (Step 5). Since the corner now sits lower in the top recess, you'll need to trim a little off the bottom edge of the side recesses. A little patience is all it takes to get a perfect fit.

Finally, the last step is to drill a few pilot holes and fasten the corner in place with screws. W

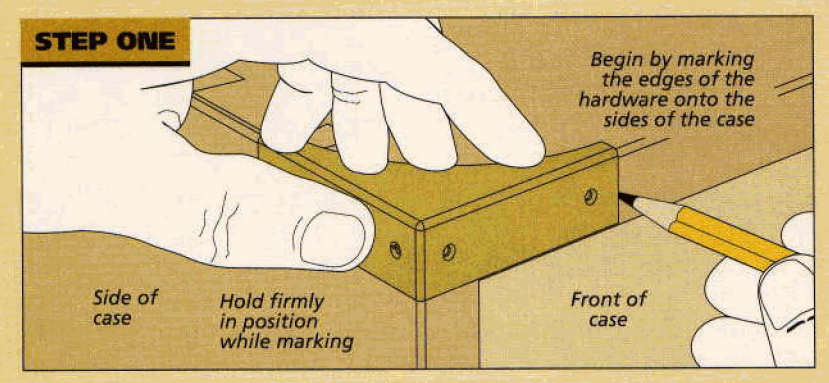

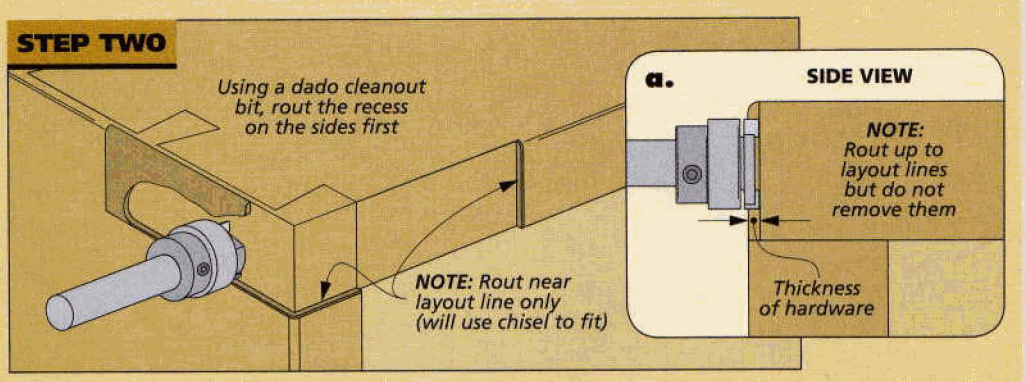

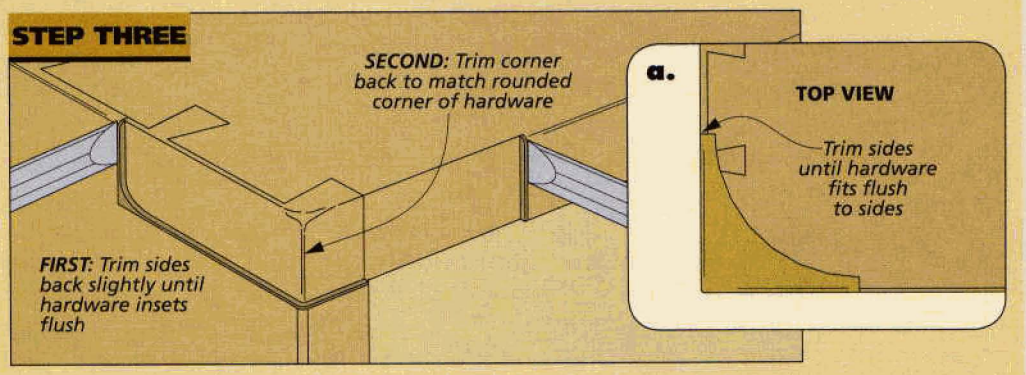

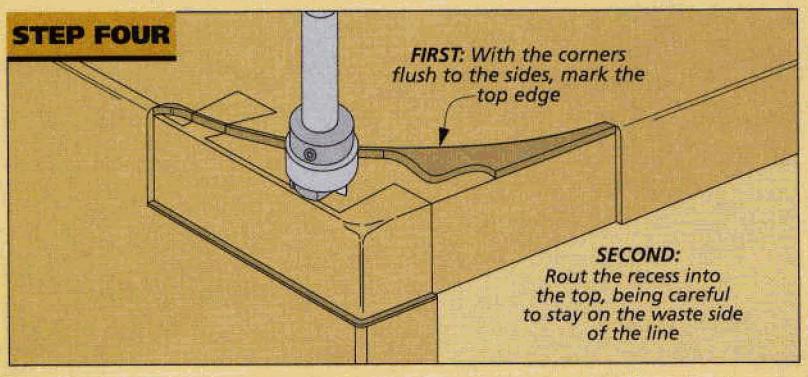

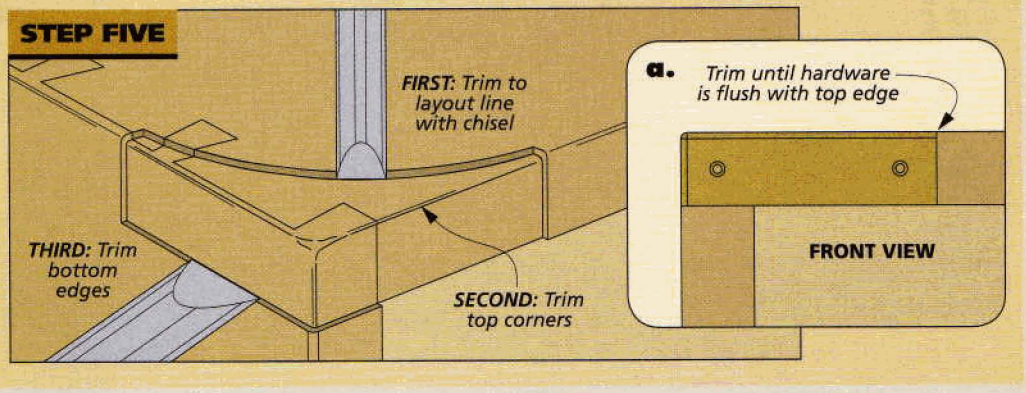

looking inside

Final Details

▼ *Drop-Front Storage Center.* Organize your entryway. This storage center features simple construction so you can build it in no time. Turn to page 12 to get started.

▲ *Campaign Chest.* Dovetail construction, classic brass hardware, and beaded drawers give this small chest big appeal. You'll find the instructions on page 30. Then learn how to cut the dovetails without a router jig on page 38.

▼ *Wide-Screen TV Cabinet.* This cabinet has plenty of storage space for electronic gear and a collection of DVDs. And it's surprisingly straightforward to make. See for yourself on page 18.